# Operator's Manual

## Sc Series Sub-Compact Tractor

# Sc2400

**Cub Cadet Yanmar LLC.**
**P.O. Box 361052**
**Cleveland, OH 44136-1052**

PRINTED IN U.S.A

Version 1.1
Code No.: CY0A041-U00201

**CALIFORNIA**

**Proposition 65 Warning**

**Diesel engine exhaust and some of its constituents are known to the State of California to cause cancer, birth defects, and other reproductive harm.**

**CALIFORNIA**

**Proposition 65 Warning**

**Battery posts, terminals and related accessories contain lead and lead compounds, chemicals known to the State of California to cause cancer and birth defects or other reproductive harm. Wash hands, after handling.**

# INTRODUCTION

## Welcome to the World of Cub Cadet Yanmar Tractor

Thank you for purchasing our tractor product that has been designed and manufactured based on our state-of-the-art technology and rich expertise in developing and manufacturing tractor products.

Handle your tractor correctly by following the instructions contained in this *Operator's Manual* so that it provides you long years of reliable and faithful service.

This manual constitutes an indispensable part of your Cub Cadet Yanmar tractor product. Always keep the manual readily accessible.
Carefully study this manual to get familiar with the instructions and information contained in it. These instructions and information are helpful in using your tractor correctly and safely, and avoiding personal injury and other accidents during operation and servicing of the tractor.
When using any implement together with your tractor, also carefully study its operation manual so that you can use it safely, correctly and efficiently.
This manual is organized with sections arranged in a particular order so that you can better understand the safety messages and the controls on your tractor to help you operate your tractor correctly and safely. This manual will also help you answer questions about operation and servicing. An index is available at the end of this manual to assist you in quickly finding necessary information.
The machine shown in this manual may somewhat differ from your actual machine. However, this manual will still assist you in understanding the instructions associated with your tractor.
Before delivery of your machine, your Cub Cadet Yanmar dealer has performed a pre-delivery check to ensure that your tractor can long remain problem-free.

# TABLE OF CONTENTS


**1. SAFETY PRECAUTIONS ..... 1-1**

1. About This Manual ..... 1-1
2. Safety-Alert Symbols ..... 1-2
3. Precautions before Operating Your Tractor ..... 1-3
4. Safe Practices for Operating Your Tractor ..... 1-4
5. Operating Your Tractor on Slopes ..... 1-6
6. Traveling on a Road ..... 1-7
7. Safe Practices for Parking Your Tractor ..... 1-7
8. Operating the Power Take Off (PTO) ..... 1-8
9. Using the 3-Point Hitch ..... 1-8
10. Safety Frame (Roll-Over Protective Structure) (ROPS) Precautions ..... 1-8
11. Safe Practices for Servicing Your Tractor ..... 1-9
12. Understanding the Tractor Safety Decals ..... 1-11
    - ■ Safety-Alert Symbols ..... 1-11
    - ■ Care of DANGER, WARNING and CAUTION Decals ..... 1-11

**2. SERVICING THE TRACTOR ..... 2-1**

**3. SPECIFICATIONS ..... 3-1**

1. Specifications Table ..... 3-1
2. Traveling Speeds ..... 3-2

**4. IMPLEMENT CAPACITIES ..... 4-1**

**5. NAMES AND FUNCTIONS OF COMPONENTS ..... 5-1**

1. Appearance ..... 5-1
2. Operator Station Controls ..... 5-2
3. Instrument Panel, Switches and Hand Controls ..... 5-3

**6. PRE-OPERATION CHECK ..... 6-1**

1. Pre-Operation Check ..... 6-1
2. Precautions before the Operation ..... 6-1
3. Routine Check ..... 6-1
4. Prevent Damage to the Plastic Surfaces and Painted Surfaces ..... 6-1

**7. OPERATING THE ENGINE ..... 7-1**

1. Starting the Engine ..... 7-1
    - ■ Opening / Closing the Fuel Shut-Off Valve ..... 7-1
    - ■ Adjusting the Operator's Seat ..... 7-2
    - ■ Fastening the Retractable Seat Belt ..... 7-2
    - ■ Engaging the Parking Brake ..... 7-3
    - ■ Checking the Lights on the Instrument Panel ..... 7-6
    - ■ Warming Up the Engine in Cold Weather ..... 7-7
2. Stopping the Engine ..... 7-8
3. Restarting a Stalled Engine ..... 7-9

## 8. OPERATING THE TRACTOR ..... 8-1

1. Operating a New Tractor ..... 8-2
2. Operation of the Tractor ..... 8-3
   - ■ Turn Signals ..... 8-3
   - ■ Headlights / Work Lights ..... 8-3
   - ■ Hazard Lights ..... 8-3
   - ■ Range Shift Lever ..... 8-4
   - ■ 4-Wheel Drive Lever ..... 8-4
   - ■ Throttle Control Lever ..... 8-5
   - ■ Forward and Reverse Drive Pedal ..... 8-6
   - ■ Engaging the Cruise Control ..... 8-7
   - ■ Disengaging the Cruise Control ..... 8-7
3. Stopping Travel of the Tractor ..... 8-8
   - ■ Emergency Stop Procedure ..... 8-8
4. Parking the Tractor ..... 8-9
   - ■ Applying the Parking Brake ..... 8-9
   - ■ Releasing the Parking Brake ..... 8-9
5. Safe Practices for Operation ..... 8-10
   - ■ Engaging the Differential Lock ..... 8-10
   - ■ Disengaging the Differential Lock ..... 8-10
   - ■ Hydro Static Transmission (HST) pressure release lever ..... 8-13
   - ■ Uphill / Downhill ..... 8-16
   - ■ Steep Downhill ..... 8-16

## 9. POWER TAKE OFF (PTO) ..... 9-1

1. Operating the Power Take Off (PTO) ..... 9-1
   - ■ Rear- Power Take Off (PTO) ..... 9-2
   - ■ Mid- Power Take Off (PTO) ..... 9-2
   - ■ Engaging the Power Take Off (PTO) ..... 9-2
   - ■ Disengaging the Power Take Off (PTO) ..... 9-4
2. Installing an Implement to the Power Take Off (PTO) Drivelines ..... 9-5
3. Operating the Power Take Off (PTO) while the Tractor is Traveling in the Reverse Direction (Reverse Override Function) ..... 9-5

## 10.3-POINT HITCH ..... 10-1

1. Adjusting the 3-Point Hitch ..... 10-1
   - ■ Right Lift Link ..... 10-2
   - ■ Top Link ..... 10-2
   - ■ Sway Link ..... 10-2
   - ■ Hitch ..... 10-2

## 11.HYDRAULIC SYSTEM ..... 11-1

1. 3-Point Hitch Control System ..... 11-1
   - ■ Operating the 3-Point Hitch Control / Cutting Height Adjustment Lever to Raise or Lower the 3-Point Hitch ..... 11-1
   - ■ Hydraulic Flow Control / Stop Knob ..... 11-2
2. Controlling the Implement Control Valve (Option) ..... 11-3
   - ■ Implement Control Valve (Option) ..... 11-3
   - ■ Implement Control Lever (Option) ..... 11-4
   - ■ Implement Lock Lever (Option) ..... 11-4
   - ■ Connecting the Implement Hydraulic Hoses ..... 11-5

## 12.TIRES, WHEELS AND BALLAST ..... 12-1

1. Tires ..... 12-1
   - ■ Inflation Pressure ..... 12-2
   - ■ Wheel Bolt Tightening Torque ..... 12-2
2. Ballast ..... 12-3
   - ■ Front Ballast ..... 12-3
   - ■ Maximum Weight ..... 12-4
   - ■ Using Liquid Weight for the Tires ..... 12-4

## 13.MAINTENANCE ..... 13-1

1. Maintenance Check List ..... 13-1
2. Lubricants ..... 13-2
3. Replacement Parts ..... 13-3

## 14.PERIODIC SERVICE ..... 14-1

- ■ Warranty and Repair of the Engine ..... 14-1

1. Opening / Closing the Hood ..... 14-2
   - ■ Opening the Hood ..... 14-2
   - ■ Closing the Hood ..... 14-2
2. Daily Checks ..... 14-3
   - ■ Refilling the Fuel Tank ..... 14-3
   - ■ Checking the Engine Oil Level ..... 14-5
   - ■ Checking the Transmission Oil Level ..... 14-6
   - ■ Checking the Radiator Hoses and Clamps ..... 14-7
   - ■ Cleaning the Radiator Cooling Fins and Screen ..... 14-7
   - ■ Cleaning the Rear Grille Screen ..... 14-8
   - ■ Checking the Cooling System ..... 14-9
   - ■ Checking the Fuel Line ..... 14-10
   - ■ Checking the Intake Air Hoses and Clamps ..... 14-10
   - ■ Checking the Safety Interlock System ..... 14-11
   - ■ Checking and Adjusting the Brake ..... 14-13
   - ■ Checking the Seat Belt and Roll-Over Protective Structure (ROPS) ..... 14-13
   - ■ Checking the Wheel Bolt Tightening Torque ..... 14-14
   - ■ Checking the Inflation Pressure ..... 14-14
   - ■ Checking the Light Bulbs ..... 14-15
   - ■ Checking the Tie-rod Rubber Boots ..... 14-15
   - ■ Checking the Hydraulic Hoses ..... 14-16
3. First 50 Hours ..... 14-18
   - ■ Changing the Engine Oil ..... 14-18
   - ■ Replacing the Engine Oil Filter ..... 14-18
   - ■ Changing the Transmission Oil ..... 14-18
   - ■ Replacing the Transmission Oil Filter ..... 14-18
4. Every 50 Hours ..... 14-18
   - ■ Checking the Front Axle Oil Level ..... 14-18
   - ■ Checking the Fuel / Water Separator ..... 14-19
   - ■ Adjusting the Fan Belt ..... 14-20
   - ■ Greasing and Lubricating ..... 14-21
5. Every 100 Hours ..... 14-23
   - ■ Engine Oil ..... 14-23
   - ■ Changing the Engine Oil ..... 14-23
   - ■ Cleaning the Fuel / Water Separator ..... 14-24
   - ■ Cleaning the Air Cleaner Element ..... 14-25

6. Every 200 Hours ..... 14-27
■ Replacing the Engine Oil Filter ..... 14-27
■ Adjusting the Toe-in ..... 14-28
7. Every 300 Hours ..... 14-28
■ Transmission Oil ..... 14-28
■ Changing the Transmission Oil and Replacing the Transmission Oil Filter ..... 14-29
8. Every 500 Hours ..... 14-30
■ Front Axle Case Oil ..... 14-30
■ Changing the Front Axle Case Oil ..... 14-30
■ Replacing the Fuel Filter Element (in the Fuel / Water Separator) ..... 14-31
■ Replacing the Fuel Filter ..... 14-31
9. Every 1000 Hours ..... 14-32
■ Coolant ..... 14-32
■ Flushing the Cooling System ..... 14-33
■ Changing the Coolant ..... 14-35
■ Adjusting the Engine Valve Clearance ..... 14-35
■ Checking the Fuel Injection Nozzle Injection Pressure ..... 14-35
■ Checking the Fuel Injection Pump ..... 14-35
10. Every 1 Year ..... 14-36
■ Replacing the Air Cleaner Element ..... 14-36
■ Flushing the Cooling System ..... 14-36
■ Changing the Coolant ..... 14-36
11. Every 2 Years ..... 14-36
■ Replacing the Radiator Hoses and Clamp ..... 14-36
■ Replacing the Fuel Line ..... 14-36
■ Replacing the Intake Air Hose ..... 14-36
■ Replacing the Hydraulic Hoses ..... 14-36

**15. SERVICING THE ELECTRICAL SYSTEM ..... 15-1**

1. Battery ..... 15-1
■ Special Note for the Battery ..... 15-1
■ Servicing the Battery Safely ..... 15-2
■ Inspecting the Battery ..... 15-3
■ Removing and Installing the Battery ..... 15-3
■ Cleaning the Battery and Terminals ..... 15-4
■ Using a Booster Battery ..... 15-5
2. Fuses ..... 15-6
■ Replacing the Accessory Fuses ..... 15-6
■ Checking the Alternator Fuse and the Main Fuse ..... 15-6
3. Bulb ..... 15-7
■ Replacing the Headlight Bulb ..... 15-7
■ Replacing the Work Light Bulb ..... 15-8
■ Replacing the Tail Light Bulb ..... 15-9
■ Replacing the Turn Signal / Hazard Lights Bulb ..... 15-9
■ Replacing the Instrument Panel Light Bulb ..... 15-10
4. Headlights ..... 15-10
■ Adjusting the Headlights ..... 15-10

**16.STORAGE ..... 16-1**

1. Safe Practices for Storage ..... 16-1
   - ■ Fuel ..... 16-2
   - ■ Engine ..... 16-2
2. Preparing the Stored Tractor for Operation ..... 16-3

**17.TROUBLESHOOTING ..... 17-1**

1. How to Use the Troubleshooting Table ..... 17-1

**18.INDEX ..... 18-1**

# 1. SAFETY PRECAUTIONS

## 1. About This Manual

This *Operator's Manual* presents you messages that help you remain aware of potential hazards and possible machine damage in operating and servicing your machine. Carefully study all the information in it so that you can positively avoid personal injury and damaged properties.

**NOTE:**

- Unless otherwise stated, the expressions–right-hand side, left-hand side, front side, and rear side, used throughout this manual refer to the sides relative to the direction of forward movement with the tractor.

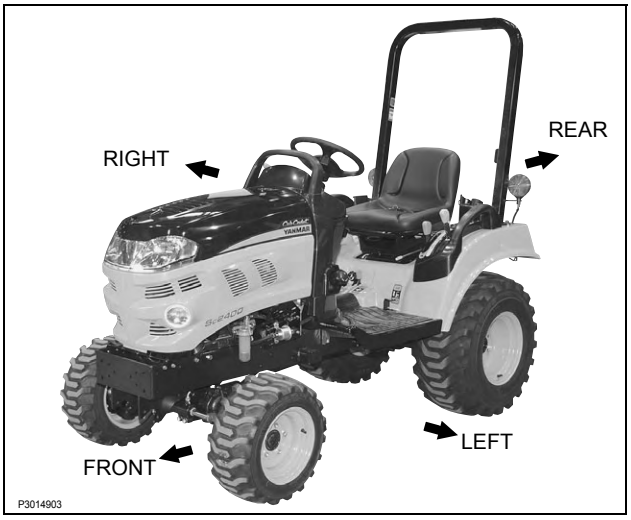

## 2. Safety-Alert Symbols



The safety-alert symbols appear with most safety statements. It means attention, become alert, your safety is involved!
Please read and strictly observe the message that follows the safety-alert symbols.

**⚠DANGER**

**Indicates a hazardous situation which, if not avoided, *will* result in death or serious injury.**

**⚠WARNING**

**Indicates a hazardous situation which, if not avoided, *could* result in death or serious injury.**

**⚠CAUTION**

**Indicates a hazardous situation which, if not avoided, could result in minor or moderate injury.**

***NOTICE***

Indicates a situation which can cause damage to the machine, personal property and/or the environment or cause the equipment to operate improperly.

**IMPORTANT:** Means that implement or property damage could occur if instructions are ignored.

**NOTE:** Provides useful information.



**WARNING: READ AND FOLLOW ALL INSTRUCTIONS IN THIS MANUAL BEFORE ATTEMPTING TO OPERATE YOUR TRACTOR. FAILURE TO COMPLY WITH THESE INSTRUCTIONS MAY RESULT IN PERSONAL INJURY.**



**WARNING:** The engine exhaust, some of its constituents, and certain vehicle components contain or emit chemicals known to the State of California to cause cancer, birth defects or other reproductive harm.



**DANGER:** Your tractor was built to be operated according to the rules for safe operation in this manual. As with any type of power equipment, carelessness or error on the part of the operator can result in serious injury. To help prevent accidents, read and take the following precautions before operating this tractor. Failure to observe the following safety instructions could result in serious injury or death.

## 3. Precautions before Operating Your Tractor

1. Understand the performance and limitations of your tractor. Carefully study this *Operator's Manual* and learn the instructions in it before operating or servicing your tractor. Keep the *Operator's Manual* in an easily accessible place.

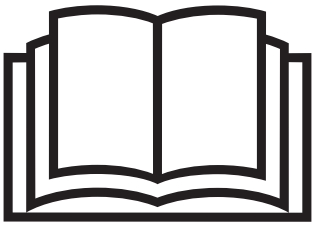

2. Strictly follow the statements given in the DANGER, CAUTION and WARNING safety decals attached to the tractor.
3. For operator safety, always install the Roll-Over Protective Structure (ROPS).
   Keep the seat belt fastened while operating the tractor with the Roll-Over Protective Structure (ROPS). This practice will reduce the possibility of injury or death in the event of roll-over accident.
   If the Roll-Over Protective Structure (ROPS) has been removed for any reason, be sure to reinstall all the associated parts before operating the tractor.
   Do not alter the Roll-Over Protective Structure (ROPS). The altered Roll-Over Protective Structure (ROPS) may fail to provide the designed protection.
   Replace the damaged Roll-Over Protective Structure (ROPS) immediately. Contact your local Cub Cadet Yanmar dealer for technical assistance.
   NEVER alter or repair the Roll-Over Protective Structure (ROPS). Welding, bending, drilling, grinding, or cutting may weaken the Roll-Over Protective Structure (ROPS). Contact your local Cub Cadet Yanmar dealer for technical assistance.
4. Always fasten the seat belt while operating the tractor with the Roll-Over Protective Structure (ROPS).
   Check the seat belt for any damage. Replace the damaged seat belt immediately. Contact your local Cub Cadet Yanmar dealer for technical assistance.
   Do not use the seat belt if the tractor does not have the Roll-Over Protective Structure (ROPS).
5. Check overhead clearance carefully before driving under power lines, wires, bridges or low hanging tree branches, before entering or leaving building, or in any other situation where the operator and/or Roll-Over Protective Structure (ROPS) may be struck, which could result in serious injury.
6. Make sure that any person (other than a usual operator) who will operate the tractor studies this *Operator's Manual* before operation. Know the controls and how to stop the machine quickly.
7. Make sure that any person or obstacle is not under or around the tractor before and during operation. Be sure to maintain sufficient overhead clearance above the tractor.
8. Do not operate your tractor and/or implement installed to it while you are under the influence of alcohol, drug, medicine or controlled substance(s) or when you are not fit for operation of your tractor.
9. For operation, wear close-fitting clothing. When operating the tractor or working around the tractor, do not wear loose-fitting clothes or jewelry, or baggy or damaged clothing. When caught by a moving part of the tractor, an accident can result. Cut-off pants or shorts do not provide protection against flying debris. Never operate the tractor in bare feet, sandals, or sneakers. Wear additional protections including non-slip safety boots or shoes, and safety goggles and gloves, etc. as appropriate or required by currently applicable local laws and regulations. Wear ear protection in a noisy environment to prevent hearing damage and reduce operator fatigue.
10. NEVER allow a passenger on any portion of the tractor.
11. Remain seated in the operator's station when operating the tractor.
12. Make sure that the brakes, clutch and other mechanical components are free from misadjustment and excessive wear. Replace any excessively worn or damaged component immediately. At regular intervals, check that all the nuts, bolts and screws are appropriately tightened. (For details, see "MAINTENANCE")

13. Always keep your tractor clean. Dust, grease or grass clippings accumulated on your tractor can lead to fire accidents or personal injury.



14. Use the handholds and running board steps when getting on and off the tractor to help prevent accidental falls. Keep the running boards clear of mud and debris.
15. Only use the implements that satisfy the requirements in this manual or are approved by your Cub Cadet Yanmar dealer. (See “4. IMPLEMENT CAPACITIES”)
16. When using front or rear mounted implements, install an appropriate weight(s) to the front or rear of your tractor to prevent upsetting of the tractor. If you choose to use the front loader, mount an implement or ballast to the 3-point hitch in order to get the tractor to stabilize. Observe the instructions about safety in the manual for the implement to be used.
17. Do not attempt to modify your tractor. Modification can deteriorate the performance and/or safety of your tractor, possibly leading to personal injury or property damage.

# 4. Safe Practices for Operating Your Tractor

## 1. Starting Your Tractor

1. Remain seated in the operator’s station when starting the engine, or actuating the levers or controls. Do not start the engine or operate controls while standing beside the tractor.
2. Before starting the engine, make sure that the forward and reverse drive pedal are in the neutral positions, the parking brake is engaged, and the Power Take Off (PTO) is disengaged.
3. Always keep the seat belt fastened around your waist whenever the tractor has the Roll-Over Protective Structure (ROPS).
4. Start the engine of your tractor only by using the starter key switch. Do not attempt to start the engine by short-circuiting across the starter solenoid terminals with a jumper wire, or by bypassing the safety start switch. This defeats the safety interlock circuit and the tractor may begin to move and/or the Power Take Off (PTO) shafts may begin to rotate, possibly leading to personal injury or property damage.
5. Do not run or idle the engine in a confined area that is poorly ventilated or not ventilated at all. The engine emits carbon monoxide gas that is colorless, odorless and can cause death.



6. Before operation, check that all the safety features are functioning correctly. Never tamper with safety devices. Check their proper operation regularly. Contact your Cub Cadet Yanmar dealer if safety devices malfunction.
7. Avoid accidental contact with control pedals while the engine is running, as this can cause unexpected movement of the tractor.
8. Never leave a running machine unattended.

## 2. Working with Your Tractor

1. Make sure that all the covers and guards are in correct position. Replace any missing or damaged cover immediately.
2. Before turning or when traveling on a rough terrain, or before stopping, decrease the tractor speed in order to prevent upsetting.
3. Use extra caution when operating over rough ground, when crossing ditches or slopes, and when turning corners.
4. Do not attempt to turn with the differential lock engaged. Attempting to turn the tractor while the differential lock is engaged can lead to a roll-over.
5. Stay clear of ditches, holes, embankments or ponds. A hazard of tractor upset can occur more easily if the ground is soft or wet. Before entering an area covered with tall grass, walk the area to detect any obstacles.
6. Always watch where you are going, especially at blind corners, trees, or other objects that can obscure your vision. Remain alert when you are approaching the end of a row, trees or any obstacle.
7. When two or more people are working in one area, always keep in good communication with each other.
8. Do not get on or off a moving tractor.
9. Make certain all tractor lights are illuminated when operating at night.

## 3. Considerations for Safety of Children

Tragic accidents can occur if the operator is not alert to the presence of children. Children are often attracted to the machine. They do not understand the dangers. Never assume they will remain where you last saw them.



1. Keep children out of the operating area and in the watchful care of an adult other than the operator.
2. Be alert if a child enters the work area, stop your tractor immediately.
3. Never allow a child to ride on the tractor. They may fall off and be seriously injured or interfere with safe machine operation.
4. Never allow children under 16 years old to operate the machine. Children 16 years and over should only operate machine under close parental supervision and proper instruction.
5. Be extremely careful when backing the tractor. Before and during backing, look back and downward. A child may be in your path.
6. Use extra care when approaching blind corners, shrubs, trees or other objects that may obscure your vision of a child or other hazard.
7. Never allow a child to play on the tractor or implement.
8. Keep children away from hot or running engines. They may suffer burns.
9. Park your tractor on a solid, flat and level place. Engage the parking brake securely, remove the key from the starter key switch to prevent unauthorized operation. If parking on a slope is unavoidable, park the tractor across the slope and chock the wheels.

## 5. Operating Your Tractor on Slopes

On a slope, the tractor is less stable and more prone to tip-over, possibly leading to serious injury or death. Remain very cautious when your tractor is on any slope.

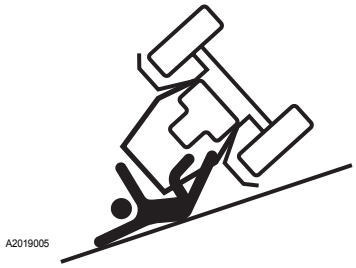


**DO:**

- Operate up and down slopes, not across.
- Remove obstacles such as rocks, limbs, etc.
- Watch for holes, ruts or bumps. Uneven terrain could overturn the machine. Tall grass can hide such obstacles.
- Place the transmission in the slow range when climbing or descending slopes.
- Keep all movement on the slopes slow and gradual. Do not make sudden changes in speed or direction. Rapid engagement or braking could cause the front of the machine to lift and rapidly flip over backwards which could cause serious injury.
- Avoid starting or stopping on a slope. If tires lose traction, disengage the Power Take Off (PTO) and proceed slowly straight down the slope.
- To avoid upset, move backward up a steep slope. If backing on the slope is not comfortable, do not attempt to continue. Avoid an extremely steep slope.
- When moving forward to escape from a ditch, or deep mud, or when traveling on a steep slope, the risk of the tractor upsetting backward is high. Always move backward to escape these situations. In the four-wheel drive mode, special caution is needed to avoid false confidence in the tractor's ability to climb slopes.

**DO NOT:**

- Do not mow near drop-offs, ditches or embankments. The mower could suddenly turn over if a wheel goes over the edge of a cliff or ditch, or if an edge caves in.

### ⚠ WARNING

- **Before approaching a slope, select an appropriate speed setting. Be sure to run the tractor at a lower speed on slopes.**
- **Suddenly starting the tractor on an uphill can cause the front wheels to jump off the ground, and this situation poses an extreme danger. To avoid this problem, run the engine at a lower speed, and gently start the tractor.**
- **Do not park the tractor on a slope. If parking on a slope is unavoidable, chock the tires, and engage the parking brake securely.**

## 6. Traveling on a Road

1. Disengagement of the 4-wheel drive is recommended.
2. Remember that the braking characteristics differ between the two and four wheel drive modes. Be aware of the current drive mode and use carefully.
3. Before turning, always slow down the tractor. High-speed turn may cause the tractor to tip over.
4. When traveling on a road, be sure that the Slow Moving Vehicle (SMV) emblem is on the tractor and is clearly visible. Use the hazard lights and turn lights as required by the currently effective local laws or regulations.
5. Strictly observe all the currently effective local traffic and safety laws and regulations.
6. Turn ON the headlights as required by the currently effective local laws or regulations.
7. Always travel at a speed that allows you to maintain control of the tractor.
8. Avoid engaging differential lock while traveling on a road. It may cause the operator to lose control of the tractor.
9. While traveling on a road, do not suddenly turn the steering wheel. Such an action can lead to loss in the stability of the tractor, and can cause an extremely dangerous situation.
10. While on a road, do not attempt to operate an implement. During transportation, put the 3-point hitch control / cutting height adjustment lever in its raised position and lock it with the position stop knob. Do not fully close the hydraulic flow control / stop knob.

## 7. Safe Practices for Parking Your Tractor

1. Disengage the Power Take Off (PTO), lower the implement to the ground, set the forward and reverse drive pedal in the neutral positions, engage the parking brake securely, stop the engine and remove the key from the starter key switch.
2. Before leaving your tractor, be sure the tractor is completely stopped.
3. Do not park on a steep slope. Rather, park on solid, flat, level ground whenever possible. If parking on a slope is unavoidable, park the tractor across the slope, and lower the implement to the ground and chock the wheels.
4. Allow the tractor to cool at least 5 minutes before storing.

## 8. Operating the Power Take Off (PTO)

1. Before getting off the tractor, connecting/ disconnecting an implement, adjusting, cleaning or servicing a Power Take Off (PTO)-driven implement, make sure that all the moving components are at a standstill.
2. Ensure that the Power Take Off (PTO) shaft cover is always in place. Replace the Power Take Off (PTO) shaft cap only when the shaft is at a standstill.



3. Before installing or operating Power Take Off (PTO)-driven implement, carefully study the manufacturer's *Operator's Manual* and the safety decals on the implement.
4. When installing the Power Take Off (PTO)- driven implements, engage the parking brake securely and chock the four wheels. Do not approach or access any rotating component.

## 9. Using the 3-Point Hitch

1. Use the 3-point hitch only in conjunction with the implement that is specifically designed for use with the 3-point hitch.
2. Before using a 3-point hitch mounted implement, the appropriate counterbalance may need to be installed on the front of the tractor.

## 10. Safety Frame (Roll-Over Protective Structure) (ROPS) Precautions

Your tractor is equipped with a Roll-Over Protective Structure (ROPS) which must be maintained in a fully functional condition. Check overhead clearance carefully before driving under power lines, wires, bridges or low hanging branches, before entering or leaving buildings, or in any other situation where the operator and/or Roll-Over Protective Structure (ROPS) may be stuck, which could result in serious injury.

1. Never modify the Roll-Over Protective Structure (ROPS) in any way.
2. Never attempt to straighten or reweld any part of the main frame or retaining brackets that have been damaged. Doing so may weaken the structure and endanger your safety.
3. Never secure any parts on the main frame or attach the safety frame with anything other than the special fasteners specified.
4. Never attach ropes, chains, or cables to the Roll-Over Protective Structure (ROPS) for pulling purposes.
5. Although the Roll-Over Protective Structure (ROPS) provides the operator the maximum protection possible, never take unnecessary risks.

## 11. Safe Practices for Servicing Your Tractor

Before starting any servicing work, park your tractor on solid, level ground, engage the parking brake securely, disengage the Power Take Off (PTO), lower the implement to the ground, set the forward and reverse drive pedal to the neutral position, stop the engine and remove the key from the starter key switch.

1. Always keep a first-aid kit and a fire extinguisher readily available.
2. Before accessing the engine, muffler, radiator or other possibly hot components, wait until the tractor has fully cooled off.



3. Use extreme care in handling diesel fuels. They are extremely flammable and the vapors are explosive. Use only an approved container.
4. Be sure to stop the engine before refueling. After refueling, replace fuel cap securely and wipe off any spilled fuel before starting the engine as it may cause a fire or explosion.
5. Do not smoke while refueling. Keep any spark or open flame away from the fuel tank.
6. Never refuel the machine indoors because fuel vapors will accumulate in the area.
7. Never store the fuel container or machine inside where there is an open flame or spark, such as a gas hot water heater, space heater or furnace.
8. Do not smoke while working around the battery. Keep any spark or open flame away from the battery. The battery emits hydrogen and oxygen gas, in particular, during recharging and can pose a hazard of explosion.

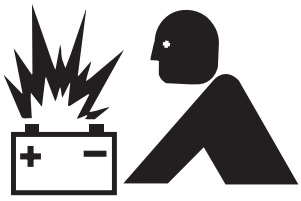

9. Prior to “jump starting” a tractor that has a fully depleted battery, read and follow all the instructions in the “7. OPERATING THE ENGINE”.
10. Carefully loosen the radiator cap to the first stop, and allow excessive pressure to escape, and only then remove the radiator cap. If the tractor is equipped with a coolant reserve tank, add coolant or water to the reserve tank, not to the radiator (See “Checking the Cooling System”).



11. Before working on or around electric components, first disconnect the battery ground cable.
12. To prevent a spark occurring from short-circuit, disconnect the battery grounding (–) terminal first and reconnect last.

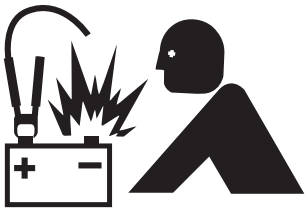

13. The operator must not mount a tire onto a rim. Only qualified personnel should do this task.
14. Always keep the tires at a correct pressure level. Do not exceed the recommended tire pressure specified in the *Operator’s Manual*.



15. Keep the tractor securely supported while changing the wheels or adjusting the wheel tread width. Be sure to tighten the wheel bolts at the specified tightening torque.

16. Avoid working under any hydraulically supported devices. Such devices can settle, suddenly leak down, or be accidentally lowered. If working beneath the tractor, or an implement, is unavoidable, be sure to support the tractor or implement with appropriate stands or lift apparatus.
17. High pressure hydraulic fluid, when released, can penetrate human skin, possibly leading to serious personal injury. Before disconnecting any hydraulic line, fully release the internal pressure. Before exerting a pressure to the hydraulic system, make sure that all connections are tight and all the lines, pipes and hoses are free from fissure/crack or any other damage.



18. Check brake operation frequently. Adjust and service as required.
19. Do not change the engine governor settings or overspeed the engine. Excessive engine speeds are dangerous.
20. Observe proper disposal laws and regulations. Prior to disposal, determine the proper method to dispose of waste from your local Environmental Protection Agency. Recycling centers are established to properly dispose of materials in an environmentally safe fashion.
21. Use proper containers when draining fluids. Do not use food or beverage containers that may mislead someone into drinking from them. Properly dispose of the containers immediately following the draining of fluids.
22. DO NOT pour oil or other fluids into the ground, down a drain or into a stream, pond, lake or other body of water. Observe Environmental Protection Agency regulations when disposing of oil, fuel, coolant, brake fluid, filters, batteries, tires and other harmful waste.
23. We do not recommend the use of a pressure washer or garden hose to clean your unit. They may cause damage to electrical components; spindles; pulleys; bearings; or the engine. The use of water will result in shortened life and reduce serviceability.

**WARNING: YOUR RESPONSIBILITY: Restrict the use of this power machine to persons who read, understand and follow the warnings and instructions in this manual and on the machine.**

# 12. Understanding the Tractor Safety Decals

## ■ Safety-Alert Symbols

The tractor safety decals illustrated in this section are provided in critical areas on the tractor so that people including the operator can remain always aware of potential hazards.
The tractor safety decals contain the words DANGER, WARNING and CAUTION together with the safety-alert symbols. DANGER and WARNING stand for the most serious hazards.
The *Operator's Manual* also contains special safety messages that explain potential hazards about which the operator must remain cautious. These messages are presented together with the word CAUTION and the safety-alert symbols.

## ■ Care of DANGER, WARNING and CAUTION Decals

1. Always keep all the danger, warning and caution decals clean and clearly legible.
2. Clean the danger, warning and caution decals with soap water, and wipe dry with clean soft cloth.
3. Replace damaged or missing danger, warning and caution decals with new decals available from your local Cub Cadet Yanmar dealer.
4. If a component having a danger, warning or caution decals is replaced with a new one, make sure that a new decal is on the same location as on the old component.
5. Affix a new danger, warning or caution decals flat on a clean, dry surface, squeezing out trapped air.

**(A) CY1A8160-65300**

## ⚠DANGER

TO AVOID INJURY OR DEATH:

- Do not start engine by shorting across starter terminals or bypassing safety start switch.
- Start engine only from seat with transmission and PTO OFF.

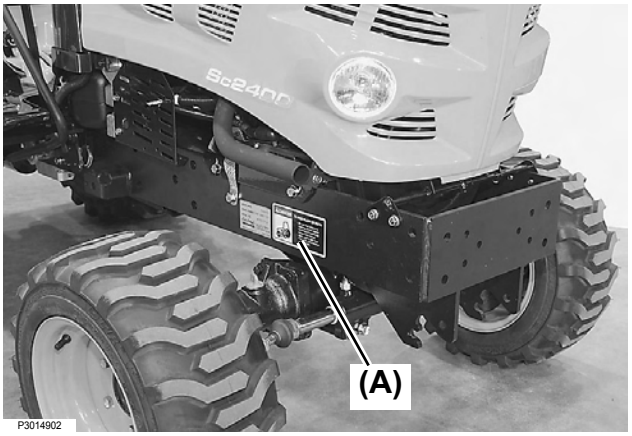


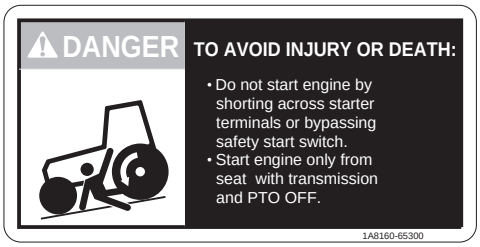


**(B) CY1A7880-65620**

## ⚠WARNING

STAY CLEAR OF ENGINE FAN AND FAN BELT

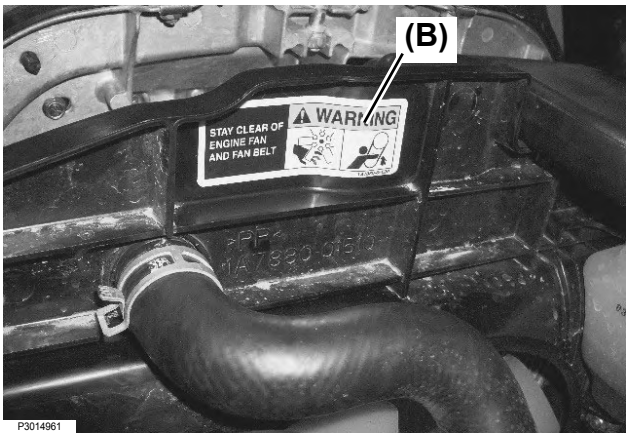




**(C) CY124764-44810**

## CAUTION

1. Adding of water is done through the sub-tank.
2. Before starting, make sure that water level is up to the "Full" mark.
3. If water level is low, remove the cap of the sub-tank and add water until the "Full" mark is reached.

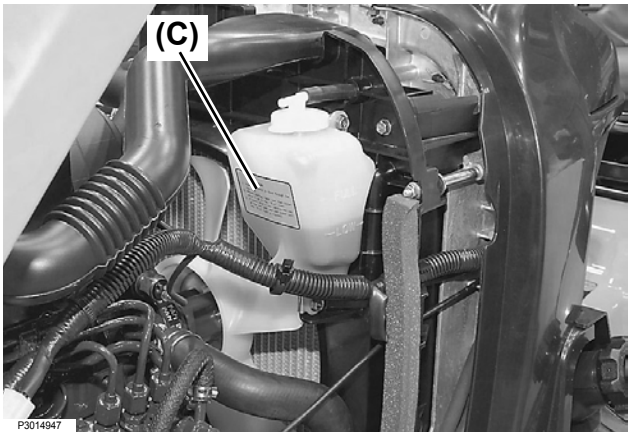


P3014947

CAUTION
1. Adding of water is done through the sub-tank.
2. Before starting,make sure that water level is up to the "Full" mark.
3. If water level is low,remove the cap of the sub-tank and add water until the "Full" mark is reached.

**(D) CY1A8160-51520**

## DANGER/POISON (ENGLISH)

- SHIELD EYES: EXPLOSIVE GASES CAN CAUSE BLINDNESS OR INJURY.
- NO SPARKS, FLAMES, SMOKING.
- SULFURIC ACID CAN CAUSE BLINDNESS OR SEVERE BURNS.
- FLUSH EYES IMMEDIATELY WITH WATER. SEEK MEDICAL HELP RIGHT AWAY.
- KEEP OUT OF REACH OF CHILDREN. DO NOT TIP.
- KEEP VENT CAPS TIGHT AND LEVEL.

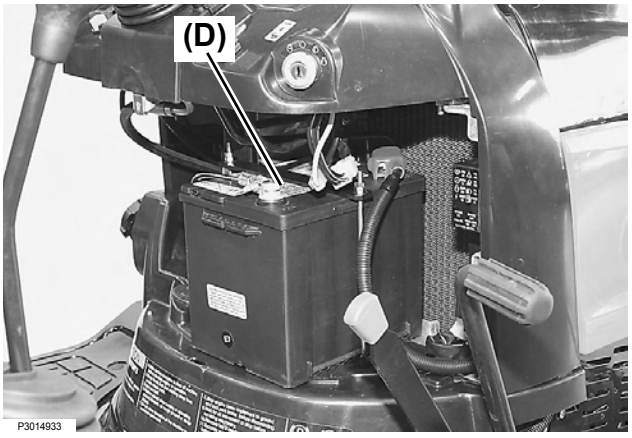


P3014933




P3013722a

**(E) CY1A7880-65600**

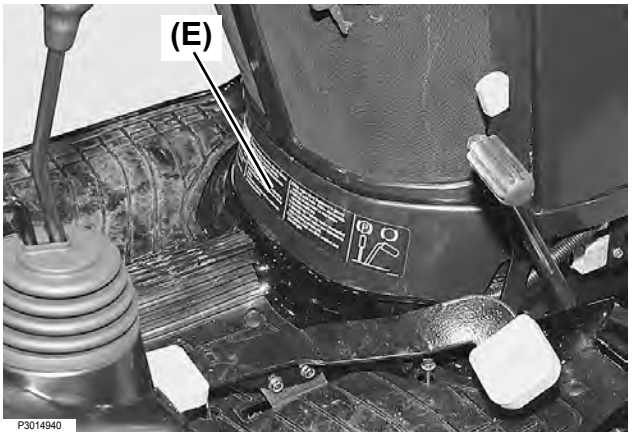


## ⚠WARNING

READ OPERATOR'S MANUAL

1. Do not operate the machine without guards shields and safety devices in place and working.
2. Keep all riders off tractor during operation.
3. Make certain everyone is clear of machine before starting engine or operation.
4. Keep hands, feet and clothing away from power-driven parts.
5. Use seat belt.
6. Reduce speed when turning or operating around hazards, on rough ground or steep slopes.
7. Do not allow operation of the machine by untrained personnel.
8. Stop engine, lower implement to ground and lock park brake before dismounting.
9. Wait for all movement to stop before servicing machinery.
10. Remove key if leaving tractor unattended.
11. Securely support tractor and implements before working underneath.
12. On public roads use SMV emblem and hazard lights.
13. Do not jump if machine tips.

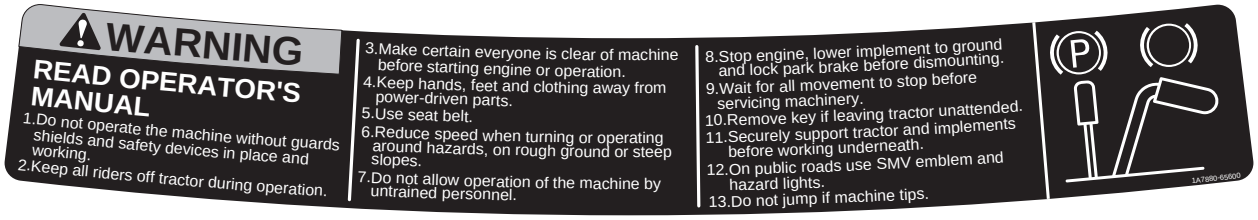


**(F) CY1A7880-65630**

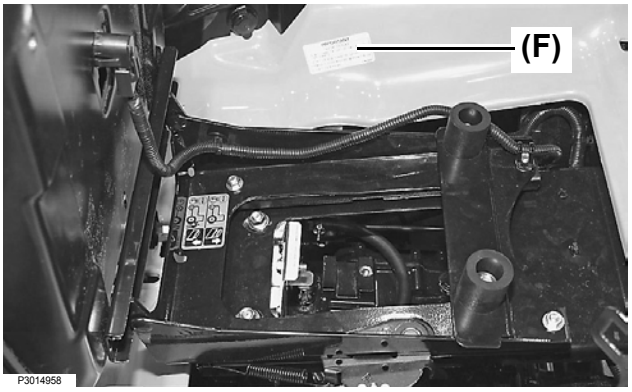


## IMPORTANT

12V DC OUTLET

1. DO NOT CONNECT A LIGHT OR LOAD OF MORE THAN 120 WATTS.
2. DO NOT USE AS A CIGARETTE LIGHTER.
3. REMOVE PLUG FROM SOCKET WHEN NOT IN USE.
4. DO NOT USE WHEN WET.

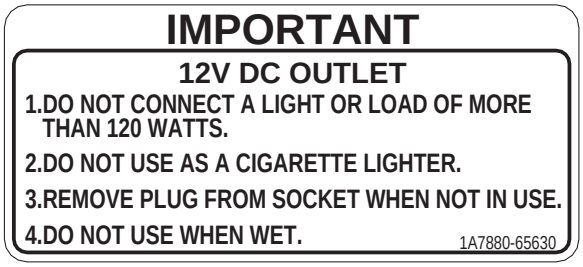

**(G) CY1A7880-65350**

## ⚠WARNING

Only use PTO in reverse when there are no children or others around

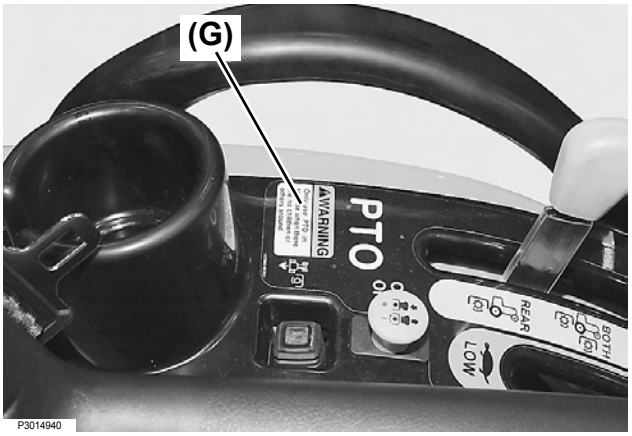





**(H) CY1A7880-85170**

## ⚠WARNING

This structure's protective capability may be impaired by structural damage, overturn, or alteration.
If any of these conditions occur, this structure must be replaced.

**(I) CY1A7880-85180**

## ⚠WARNING

Use seat belt

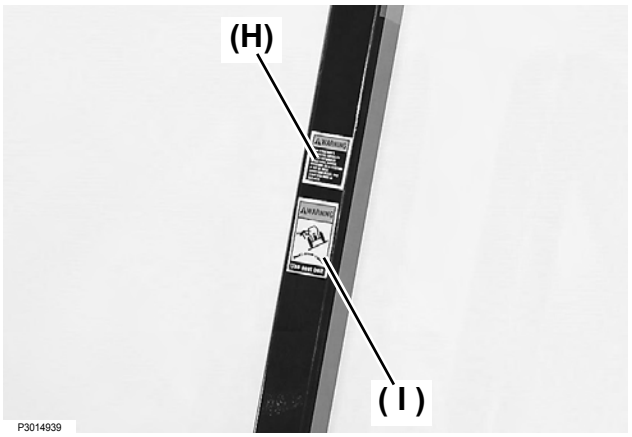


(H)




( I )

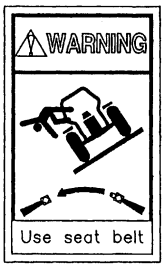

**(J) CY198220-65621**

## ⚠WARNING

AVOID INJURY FROM PTO

- ●Keep all shields in place
- ●Keep hands, feet and clothing away
- ●Operate only with 540 RPM

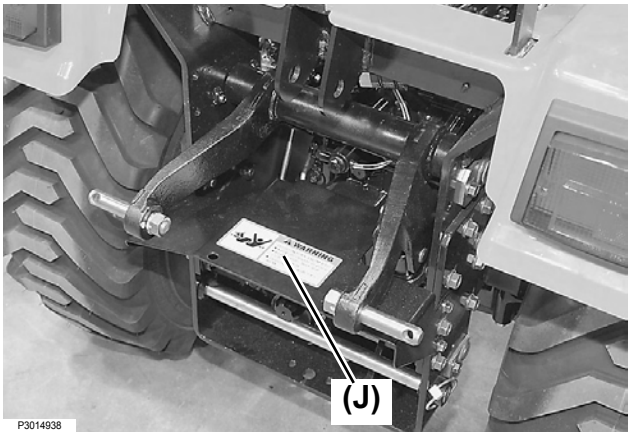


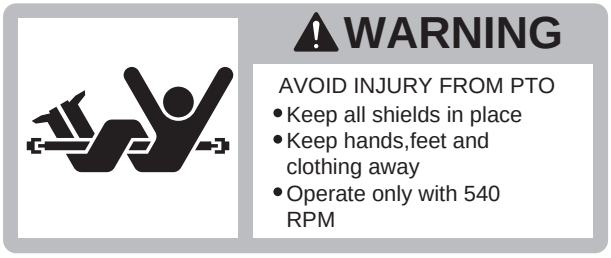


**(K) CY1A8160-65310**

## ⚠WARNING

TO AVOID INJURY:

Before leaving or servicing machine,

- ●Stop engine.
- ●Set parking brake.
- ●Park on level ground.
- ●Lower all implements to the ground.
- ●Remove key.

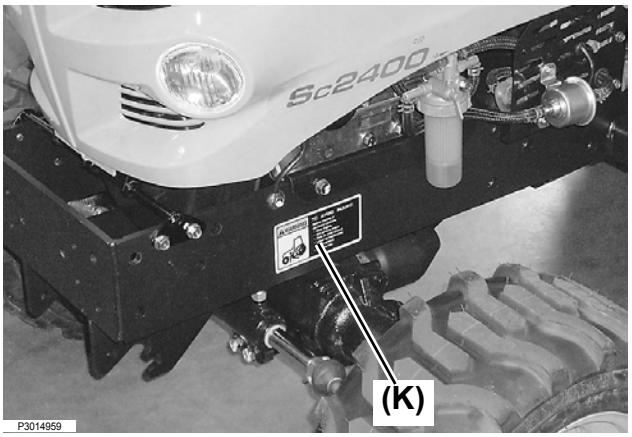


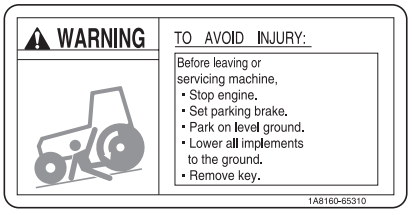

# 2. SERVICING THE TRACTOR

Your Cub Cadet Yanmar dealer wants to remain committed to the tractors our customers have purchased and intends to support our customers in fully developing the performance of their Cub Cadet Yanmar tractors. After carefully studying this manual, the customers themselves will be able to do a certain portion of the regular maintenance work.
When parts / components or major service work is needed, contact your local Cub Cadet Yanmar dealer for technical assistance.
For information about the service work, contact your local Cub Cadet Yanmar dealer. When ordering a part / component, inform your local Cub Cadet Yanmar dealer of the tractor and engine serial numbers. Find both serial numbers and enter them in the following table.

| | Type | Serial No. |
|---|---|---|
| Tractor | | |
| Engine | | |
| Date of Purchase | | |
| Name of Dealer | | |

***(A) Tractor identification plate with tractor serial number***
***(B) Engine serial number***

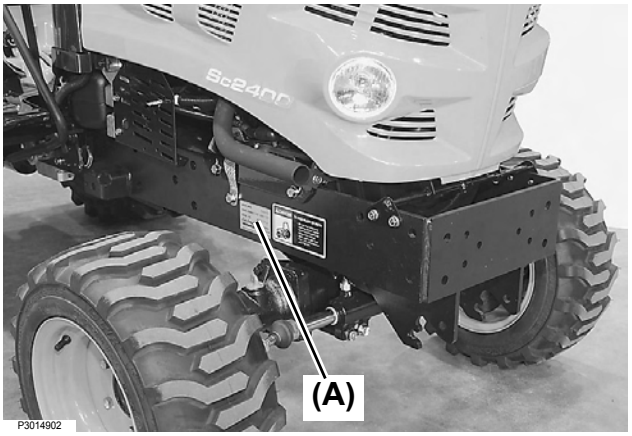


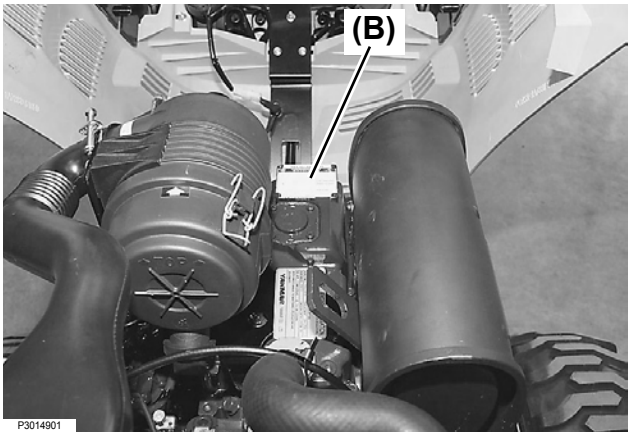

# 3. SPECIFICATIONS

## 1. Specifications Table

| Model | | | | Sc2400 |
|---|---|---|---|---|
| Power Take Off (PTO) Power | | | hp (kW) | 16.5 (12.3) |
| Engine | Maker | | | YANMAR |
| | Model | | | 3TNV72 |
| | Type | | | Indirect Injection, Vertical, Water-Cooled, 4 Cycle Diesel |
| | Number of Cylinders | | | 3 |
| | Bore and Stroke | | in. (mm) | 2.834 × 2.913 (72 × 74) |
| | Total Displacement | | cu. in. (L) | 55.1 (0.903) |
| | Gross Power | | hp (kW) | 24.0 (17.9) |
| | Net Power | | hp (kW) | 20.4 (15.0) |
| | Rated Revolution | | rpm | 3300 |
| | High Idle Speed | | rpm | 3470 |
| | Low Idle Speed | | rpm | 1150 |
| | Maximum Torque | | ft•lb (N•m) | 38.3 (52.3) |
| | Battery | | | 12V BP24 , CCA: 540 A |
| | Fuel | | | Diesel Fuel No.1-D , No.2-D |
| Capacities | Fuel Tank | | US gal (L) | Approximately 5.8 (22) |
| | Engine Oil | | US qt (L) | Approximately 2.5 (2.4) |
| | Engine Coolant | | US qt (L) | Approximately 3.4 (3.2) |
| | Transmission Oil | | US gal (L) | Approximately 2.0 (7.5) |
| Dimensions | Overall Length (without 3-Point Hitch) | | in. (mm) | 82.7 (2100) |
| | Overall Length (with 3P) | | in. (mm) | 95.5 (2425) |
| | Overall Width (with R4 Tires) | | in. (mm) | 44.5 (1130) |
| | Overall Height (with Roll-Over Protective Structure (ROPS), R4 Tires) | | in. (mm) | 71.5 (1817) |
| | Overall Height (with R4 Tires) (Top of Steering Wheel) | | in. (mm) | 49.9 (1267) |
| | Wheel Base | | in. (mm) | 55.1 (1400) |
| | Min. Ground Clearance (with R4 Tires) | | in. (mm) | 7.5 (190) |
| | Tread (with R4) | Front | in. (mm) | 34.6 (879) |
| | | Rear | in. (mm) | 32.2 (820) |
| Weight (with Roll-Over Protective Structure (ROPS) and R4 Tires) | | | lb (kg) | 1279 (580) |

| | | | | |
|---|---|---|---|---|
| Traveling System | Tire | Ag (R1) | Front | 18 × 8.50-10 |
| | | | Rear | 26 × 12.00-12 |
| | | Turf (R3) | Front | 18 × 8.50-10 |
| | | | Rear | 26 × 12.00-12 |
| | | Industrial (R4) | Front | 18 × 8.50-10 |
| | | | Rear | 26 × 12.00-12 |
| | Clutch | | | – |
| | Steering | | | Power Steering |
| | Transmission | | | Hydrostatic Transmission, 2 Range Speeds |
| | Drive | | | Selected 4WD |
| | Brake | | | Wet plates |
| | Minimum Turning Radius | | ft (m) | 7.2 (2.2) |
| | Differential Lock | | | Foot Pedal Control |
| Hydraulic Unit | Hydraulic Control System Type | | | Position Control |
| | Pump Capacity (main) | | US gal/min (L/min) | Approximately 3.4 (13.2) |
| | Pump Capacity (steering) | | US gal/min (L/min) | Approximately 3.4 (13.2) |
| | 3-Point Hitch | | | Limited Category Ⅰ |
| | Max. Lift Force | Lift Point | lb. (kg) | 1036 (470) |
| | | 24 in. Behind Lift Point | lb. (kg) | 661 (300) |
| | System Pressure | | psi (MPa) | 1813 (12.5) |
| Power Take Off (PTO) | Type | | | Electric Clutch |
| | Rear | Shaft Size | | SAE 1-3/8, 6-Splines |
| | | Type | | Independent |
| | | Speed / Engine | rpm | 540 / 3111 |
| | Mid | Shaft Size | | SAE 16/32, 15-Splines |
| | | Type | | Independent |
| | | Speed / Engine | rpm | 2100 / 3338 |

## 2. Traveling Speeds

| Model | | Sc2400 | |
|---|---|---|---|
| | Range Shift Lever | mph | km/h |
| Forward | Slow | 0-6.0 | 0-9.7 |
| | Fast | 0-9.3 | 0-15 |
| Reverse | Slow | 0-3.6 | 0-5.8 |
| | Fast | 0-5.6 | 0-9 |

# 4. IMPLEMENT CAPACITIES

The Cub Cadet Yanmar tractor has been carefully tested in the configuration equipped with implements sold or approved by Cub Cadet Yanmar and has proved to perform properly. Do not use any implement that has not been sold or recommended by a Cub Cadet Yanmar dealer, or that fails to satisfy the specified values given below. Never mount an implement that is not approved for the Cub Cadet Yanmar tractor. Using unapproved implements could result in malfunction, failure, and damage to the tractor and/or implement, and increase the possibility of injury to the operator or other people. The Cub Cadet Yanmar warranty does not cover any malfunction or failure that results from use of an unapproved implement.

| | 24in. Behind Lift Point Maximum Lifting Capacity | Implement Weight | Maximum Vertical Hitch Load | Maximum Towing Capacity |
|---|---|---|---|---|
| | $W_0$ | $W_1$ | $W_2$ | $W_3$ |
| lb | 661 | As specified in the list below. | 331 | 661 |
| kg | 300 | | 150 | 300 |

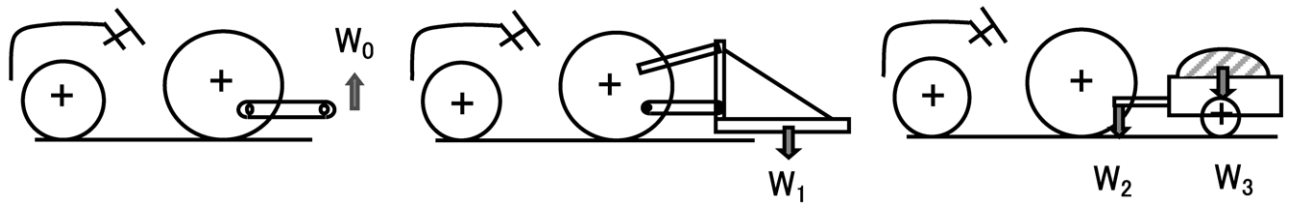


| Implement | | Remarks | Unit | Amount | |
|---|---|---|---|---|---|
| Front - End Loader | | Maximum Lift Capacity (at Pivot) | lb (kg) | 700 | 317 |
| | | Maximum Overhang (Pivot - Front Tire Center) | in. (mm) | 40 | 1022 |
| | | Maximum Weight | lb (kg) | 441 | 200 |
| | | Maximum Oil Pressure | psi (MPa) | 1885 | 13 |
| Mower | Mid - Mount | Maximum Cutting Width | in. (mm) | 60 | 1524 |
| | | Maximum Weight | lb (kg) | 254 | 115 |
| | Rear - Mount | Maximum Cutting Width | in. (mm) | 48 | 1219 |
| | | Maximum Weight | lb (kg) | 351 | 159 |
| Rotary Tiller | | Maximum Tilling Width | in. (mm) | 42 | 1067 |
| | | Maximum Weight | lb (kg) | 342 | 155 |
| Box Scraper (Box Blade) | | Maximum Cutting Width | in. (mm) | 48 | 1219 |
| | | Maximum Weight | lb (kg) | 254 | 115 |
| Rear Blade | | Maximum Cutting Width | in. (mm) | 60 | 1524 |
| | | Maximum Weight | lb (kg) | 176 | 80 |

**NOTE:**

●Backhoes cannot be attached.

# 5. NAMES AND FUNCTIONS OF COMPONENTS

## 1. Appearance

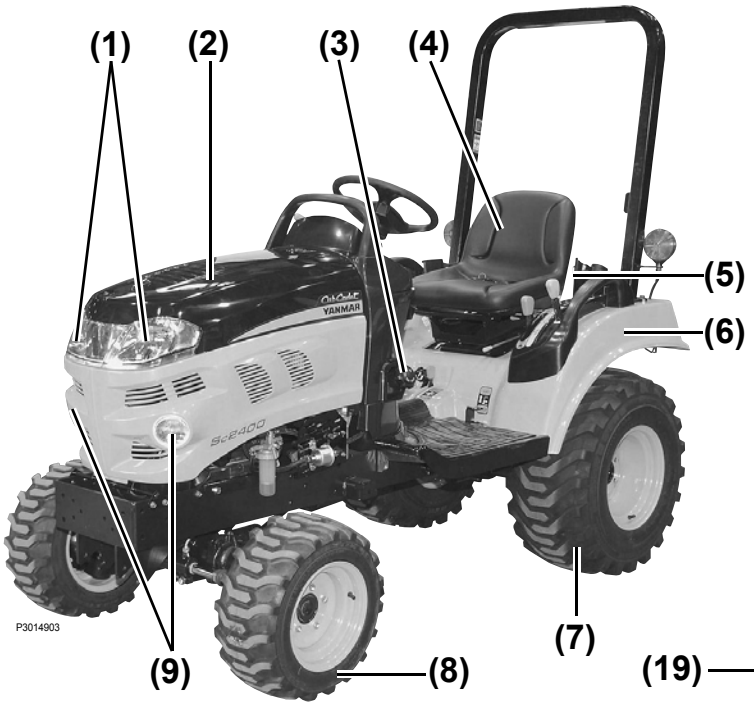


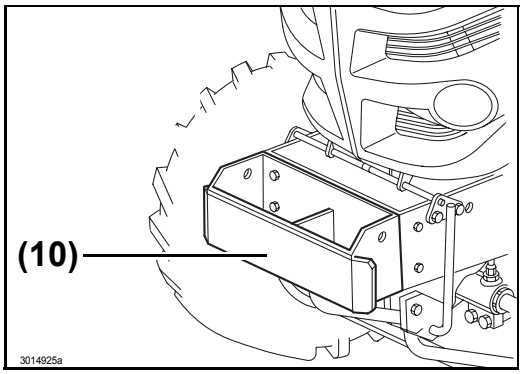


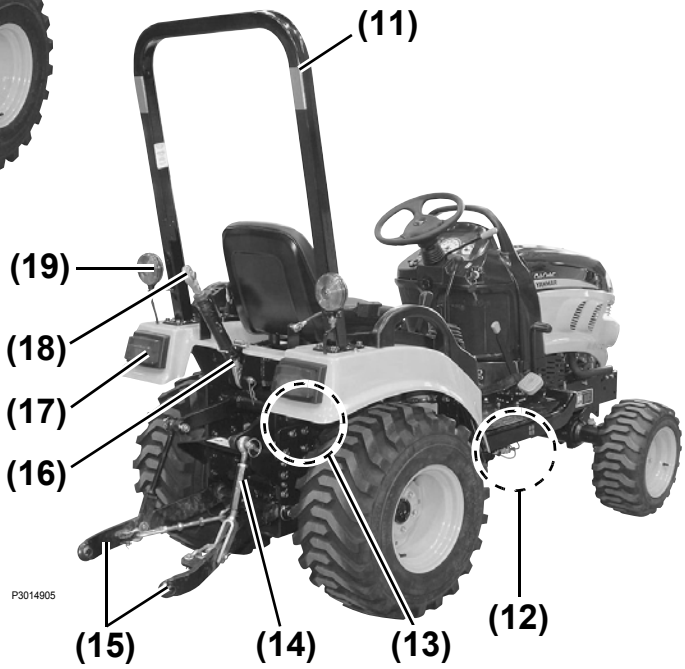


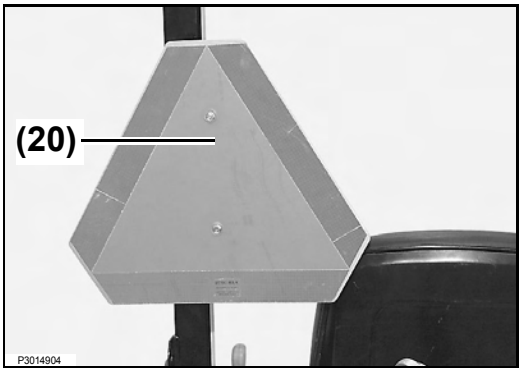


(1) Headlights
(2) Hood
(3) Fuel inlet
(4) Seat
(5) Seat belt
(6) Fender
(7) Rear tires
(8) Front tires
(9) Work lights
(10) Front weight hitch (Option)
(11) Roll-Over Protective Structure (ROPS)
(12) Hydraulic quick couplers (Option)
(13) 12V DC outlet (for additional rear work light)
(14) Rear Power Take Off (PTO) shaft
(15) Lower links
(16) Top link retainer
(17) Tail lights
(18) Top link
(19) Turn signal / Hazard lights
(20) Slow Moving Vehicle (SMV) emblem

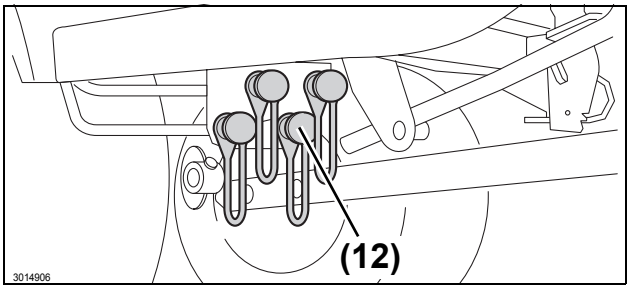

## 2. Operator Station Controls

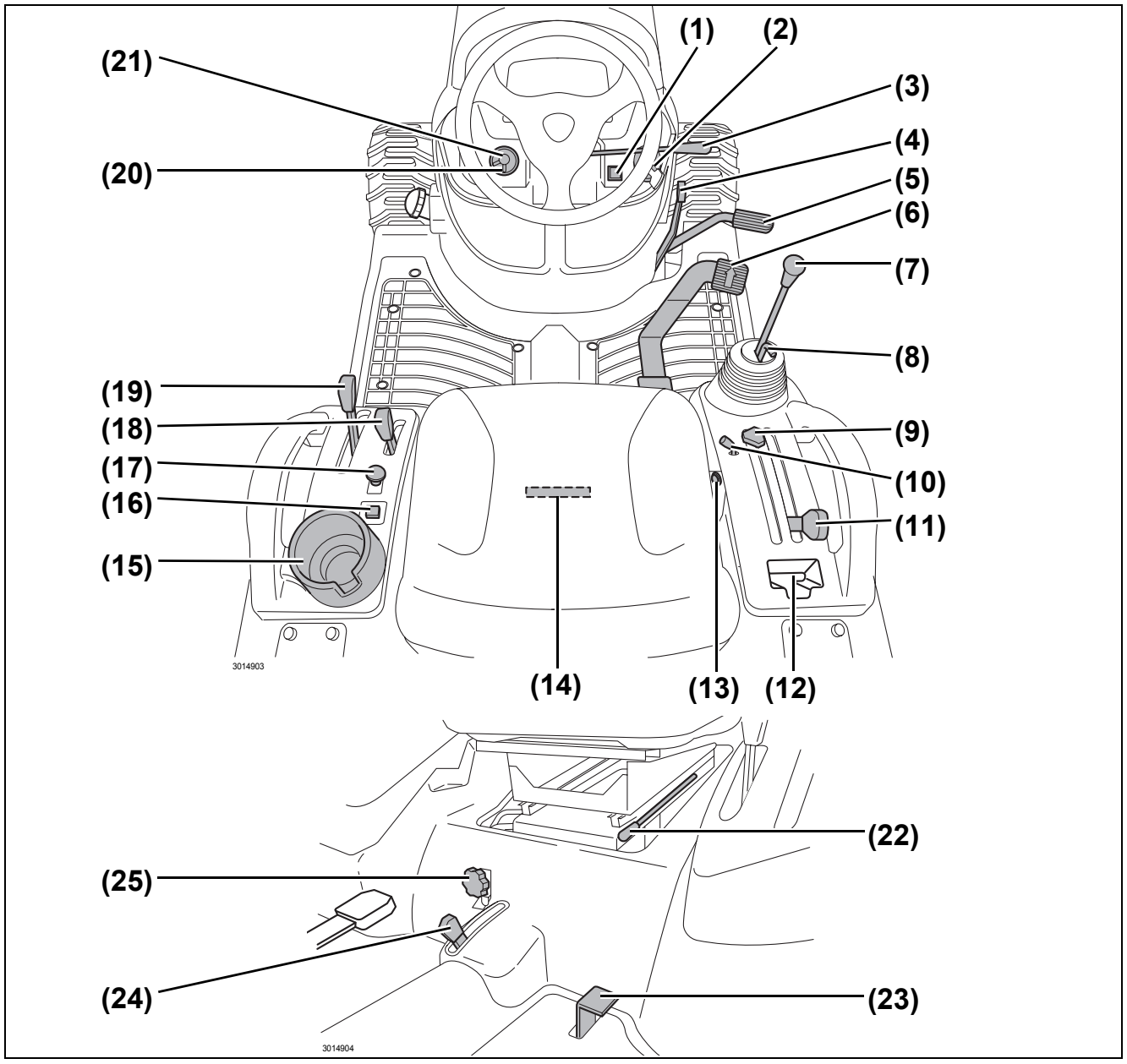


(1) Hazard lights button switch
(2) Starter key switch
(3) Throttle control lever
(4) Parking brake lever
(5) Brake pedal
(6) Forward and reverse drive pedal
(7) Implement control lever (Option)
(8) Implement lock lever (Option)
(9) Position stop knob
(10) Cruise control lever
(11) 3-point hitch control / cutting height adjustment lever
(12) Storage compartment
(13) 12V DC outlet
(14) Hydro Static Transmission (HST) pressure release lever
(15) Cup holder
(16) Reverse - override - switch
(17) Power Take Off (PTO) switch
(18) Range shift lever
(19) Mid- / Rear-Power Take Off (PTO) select lever
(20) Turn signal switch
(21) Headlight / work light switch
(22) Seat adjustment lever
(23) Differential lock foot pedal
(24) 4-wheel drive lever
(25) Hydraulic flow control / stop knob

# 3. Instrument Panel, Switches and Hand Controls

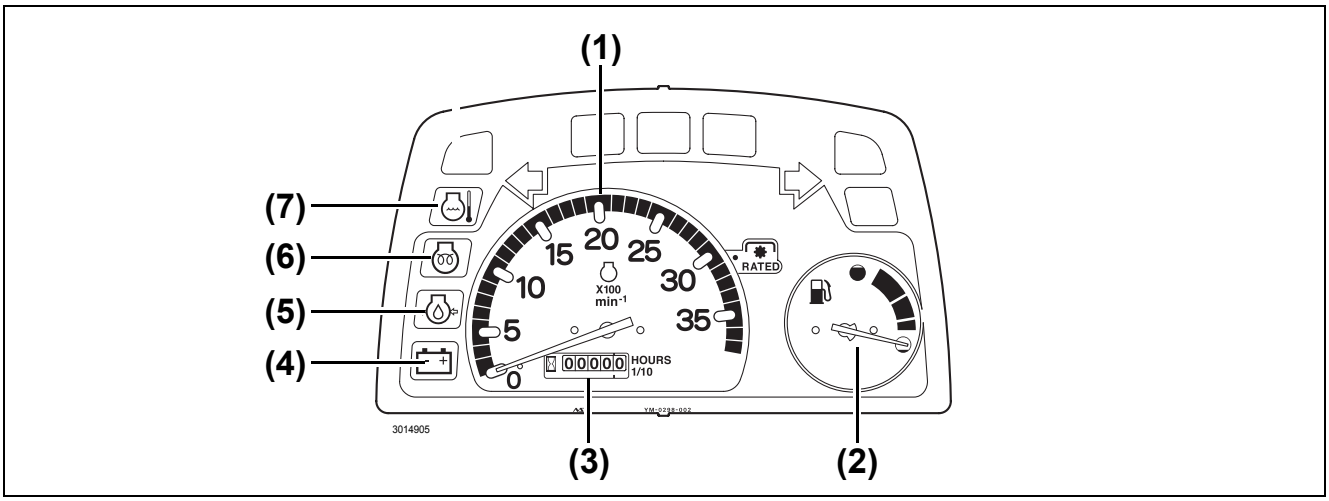


**(1) Tachometer**

This meter indicates the current engine speed in increments of 100 rpm.

**(2) Fuel Gauge**

This gauge indicates level of fuel in the fuel tank, while the starter key switch is in the ON position.

**(3) Hour Meter**

This meter indicates the total accumulated operating hours. This indication is based on the assumption that the engine runs at a speed of 3300 rpm.

**(4) Alternator / Battery Charging Light**

This light remains lit when the starter key switch is in the ON position and the engine is OFF.

**IMPORTANT:**

- If this light illuminates while the engine is running, the power generated by the alternator is too low. Fully pull the throttle control lever backward and increase the engine speed. If the light still remains lit, immediately stop the engine and contact your local Cub Cadet Yanmar dealer for technical assistance.

**(5) Engine Oil Pressure Warning Light**

This light remains lit when the starter key switch is in the ON position and the engine is OFF.

**IMPORTANT:**

- If this light illuminates while the engine is running, the engine oil pressure is too low. Immediately stop the engine and contact your local Cub Cadet Yanmar dealer for technical assistance.

**(6) Preheater Pilot Light**

This light illuminates when the engine starter key switch is turned to the preheating position. Preheating time should be determined according to outside air temperature. For details, refer to the table below.

| Temperature (°F (°C)) | Preheating Time (sec.) |
|---|---|
| Over 32 (0) | 2 to 3 |
| Below 32 (0) | 4 |

**(7) Engine Coolant Warning Light**

This light illuminates when engine coolant temperature becomes abnormally high.

**IMPORTANT:**

- When the engine coolant temperature warning light illuminates, immediately decrease the load of the tractor. To lower the coolant temperature, run the engine at idle until the engine coolant warning light turns OFF.
  After the engine coolant warning light is turned OFF, stop the engine. Allow it to cool off, and only then, check the following points.
  (1) Coolant water level in the radiator and reserve tank
  (2) Clogging of the radiator fin and radiator screen
  (3) Tension of the fan belt
  For more details about the maintenance procedure, refer to the “14. PERIODIC SERVICE” section.
- When the coolant temperature warning light illuminates again, stop the engine and immediately contact your local Cub Cadet Yanmar dealer.

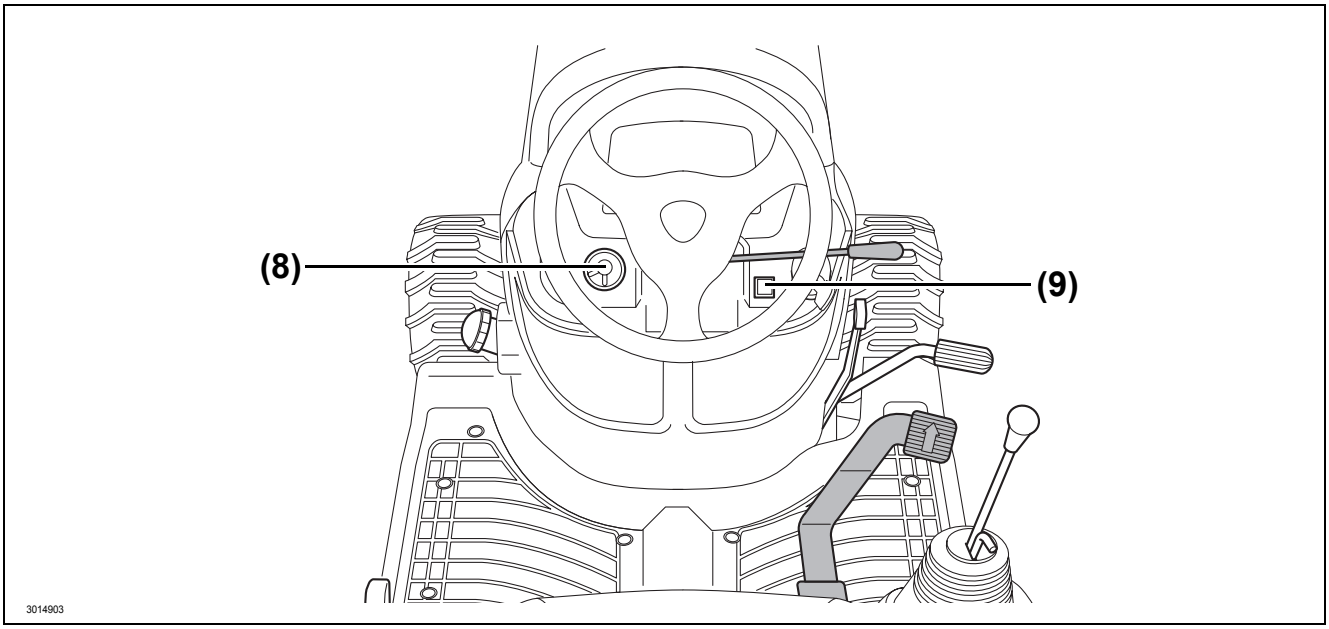


**(8) Headlight / Work Light / Turn Signal Switch**

Use the blue lever to turn ON/OFF the headlights and work lights. Turning the blue lever to the (b) position illuminates the headlights and turning it to the (c) position illuminates the work lights and headlights at the same time.

The yellow lever is a turn signal switch. Move the turn signal switch right to signal a right turn. Move the turn signal switch left to signal a left turn.

The tail light illuminates while the headlight illuminates. When the turn signal light is illuminated or blinked, the tail light similarly illuminates or flashes.

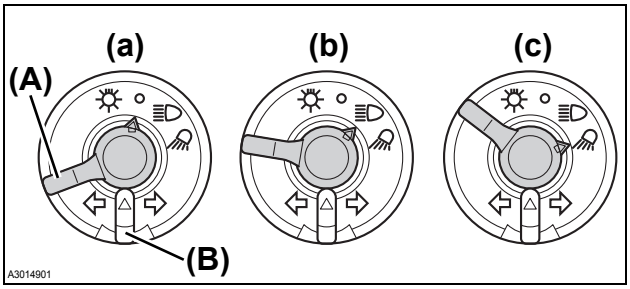


***(A) Blue lever (Headlight / work light switch)***
***(B) Yellow lever (Turn signal switch)***
*(a) OFF*
*(b) Headlights ON*
*(c) Headlights and work lights ON*

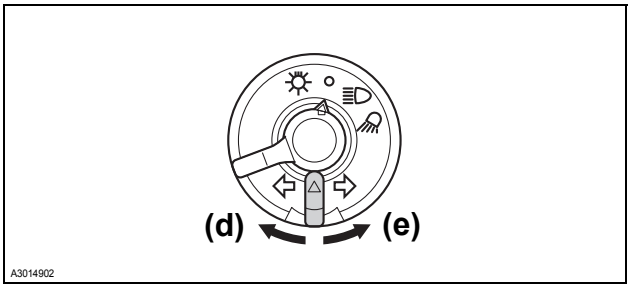


*(d) To signal a left turn, move the lever to left*
*(e) To signal a right turn, move the lever to right*

**(9) Hazard Lights Button Switch**

Depress the red button to turn the hazard lights ON. Pressing this button will cause the button to light up and the hazard lights at the rear of tractor to flash. (The hazard lights remain flashing even when the starter key switch is in the OFF position. Remember that allowing the turn signal / hazard lights to flash for an extended period can lead to loss of battery voltage.)

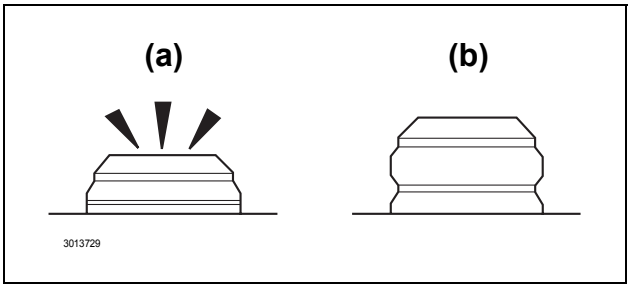


*(a) ON*
*(b) OFF*

# 6. PRE-OPERATION CHECK

## 1. Pre-Operation Check

- Check the tractor for damage, excessive wear, cracks, missing parts, exposed wiring and any other problems, including leaks.
- Check the joints and connections for looseness.
- Check that all the lights illuminate.
- Check that all the safety-alert decals are in correct position.

If any problem is detected, contact your local Cub Cadet Yanmar dealer, and correct the problem. NEVER operate the tractor when a problem has been indicated.

## 2. Precautions before the Operation

- ALWAYS be aware of the limitations of the performance of the tractor.
- Operate the tractor, keeping in mind “SAFETY FIRST!”.

## 3. Routine Check

- Check the safety features.
- Check the tire pressure.
- Check that the remaining diesel fuel is sufficient for the intended operation.
- Check the engine oil level.
- Check the transmission oil level.
- Check the coolant level.
- Remove grass clippings and debris from the tractor.
- Clean the air cleaner element.
- Check the tractor for any leaks such as oil, coolant and fuel.
- Check the radiator for possible blockage.
- Check the retractable seat belt and the Roll-Over Protective Structure (ROPS) for any problem.

If any problem is detected, contact your local Cub Cadet Yanmar dealer and correct the problem.

## 4. Prevent Damage to the Plastic Surfaces and Painted Surfaces

- Only wipe off the tractor after washing.
- Chemical agents such as pesticides can damage the plastic surfaces and painted surfaces. NEVER spray chemical agents near the machine.
- NEVER spill diesel fuel onto the tractor. Diesel fuel can damage the plastic surfaces and painted surfaces. ALWAYS wipe up spilled diesel fuel immediately.

# 7. OPERATING THE ENGINE

**⚠DANGER**



NEVER run or idle the engine in a confined area that is poorly ventilated or not ventilated at all. The engine emits carbon monoxide as that is colorless, odorless and can cause death.

**⚠WARNING**

ALWAYS remain seated in the operator's station when starting the engine or actuating the levers or controls.

Always ensure that your foot is removed from the forward and reverse pedal, the parking brake is engaged and Power Take Off (PTO) switch is in the OFF position before the engine is started.

While operating the tractor, make sure to keep the seat belt fastened with the Roll-Over Protective Structure (ROPS) equipped. This will reduce the possibility of injury or death in the event of an accident such as an overturn or roll-over.

Start the engine of your tractor only with the starter key switch. NEVER attempt to start the tractor engine by short-circuiting across its terminals with a jumper or by bypassing the safety start switch.

Before operation, make sure that all the safety features are functioning correctly. Make corrections as necessary.

## 1. Starting the Engine

### 1. Open the fuel shut-off valve.

### ■ Opening / Closing the Fuel Shut-Off Valve

- To open the valve, turn the valve lever to the vertical position.
- To close the valve, turn the valve lever to the horizontal position.

***(A) Valve lever***
*(O) Open*
*(C) Close*

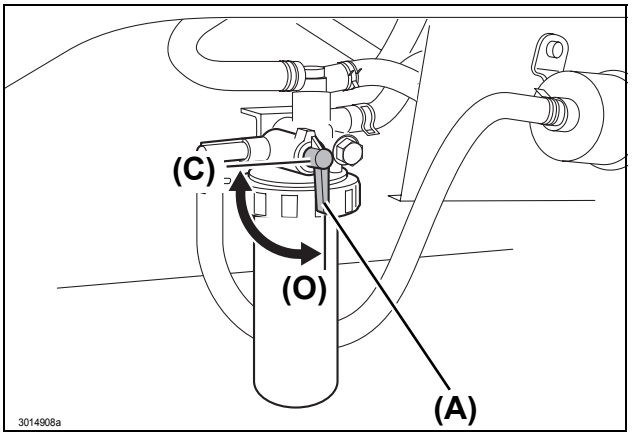

## 2. Sit on the seat.

### ■ Adjusting the Operator's Seat

1. Engage the parking brake securely and stop the engine.
2. Sit on the seat.
3. Pull the seat adjustment lever to the left.
4. Move the seat forward and backward to find the optimal position and then release the seat adjustment lever.
5. While remaining seated, confirm that various control levers can be comfortably operated. If any control lever cannot be operated comfortably, readjust the seat position as necessary.

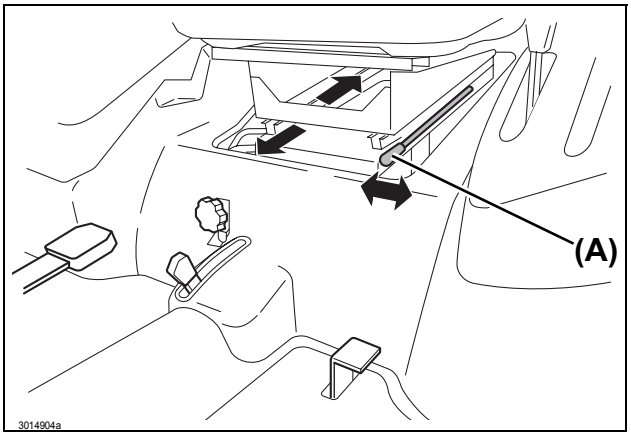


***(A) Seat adjustment lever***

### ■ Fastening the Retractable Seat Belt

**⚠WARNING**

**Avoid injury:**

- **While operating the tractor, make sure to keep the seat belt fastened with the Roll-Over Protective Structure (ROPS) equipped. This will reduce the possibility of injury or death in the event of an accident such as an overturn or roll-over.**
- **NEVER use the retractable seat belt when operating the tractor without the Roll-Over Protective Structure (ROPS).**

1. Draw out the right and left segments of the retractable seat belt from the retracted positions on both sides of the operator's seat.
2. Connect both segments of the belt with the buckle, being careful to avoid twisting of the belt, adjust the belt length, being suitable for the operator.

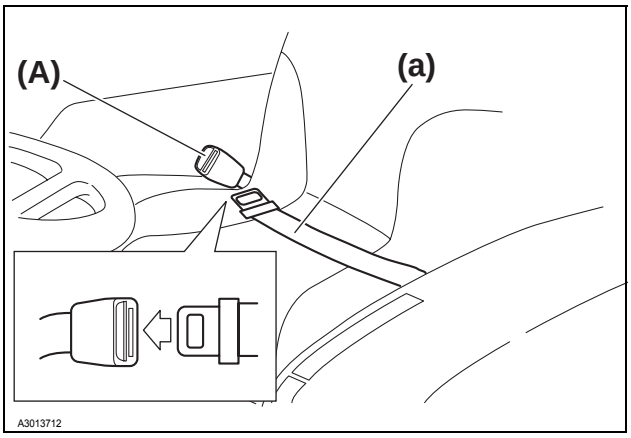


***(A) Buckle***
*(a) Adjust the belt length*

**⚠WARNING**

- **If the retractable seat belt is situated far away from the operator's abdominal area, a dangerous situation can be present in the event of an accident. ALWAYS ensure that the retractable seat belt is in the lowest possible position to the operator's abdominal area.**
- **The retractable seat belt must be used by the operator only. NEVER use the retractable seat belt for two or more persons or to hold an object to the operator.**

### 3. Remove foot from the forward and reverse drive pedal and set the pedal to the NEUTRAL position.

**NOTE:**

- With the parking brake engaged, the forward and reverse drive pedal is locked in the NEUTRAL position.

### 4. Engage the parking brake securely.

### ■ Engaging the Parking Brake

1. Fully depress the brake pedal.
2. Fully pull the parking brake lever backward to engage the parking brake securely.
3. Remove foot and make sure that the brake is fully locked.

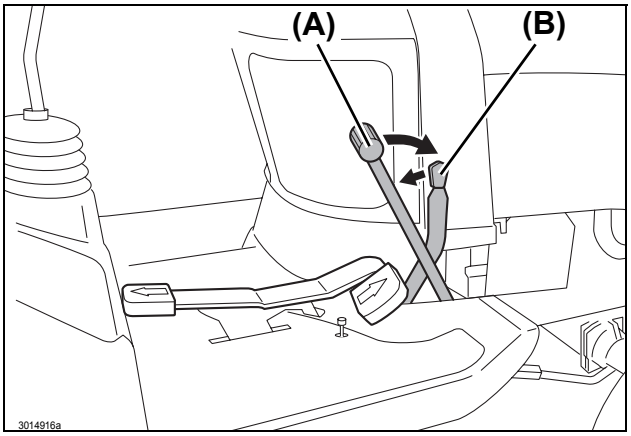


**Note:**

- Applying the parking brake engages the differential lock at the same time.

***(A) Brake pedal***
***(B) Parking brake lever***

**IMPORTANT: Avoid damage.**

- NEVER step on the forward and reverse drive pedal while the parking brake is engaged.

### 5. Set the range shift lever to the Slow position.

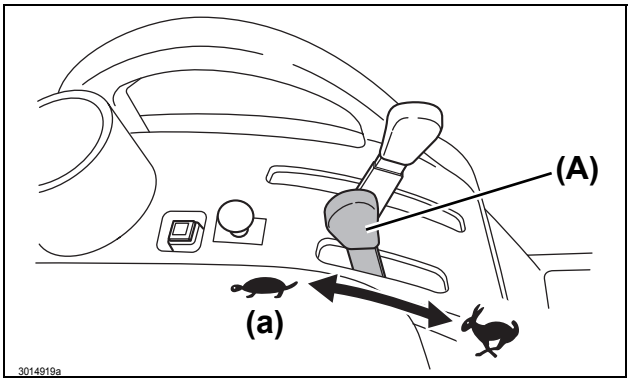


***(A) Range shift lever***
*(a) Slow position*

## 6. Turn off the Power Take Off (PTO) switch.

Push in and set the Power Take Off (PTO) switch to the OFF position.

***(A) Power Take Off (PTO) switch***
*(a) OFF position*
*(b) ON position*

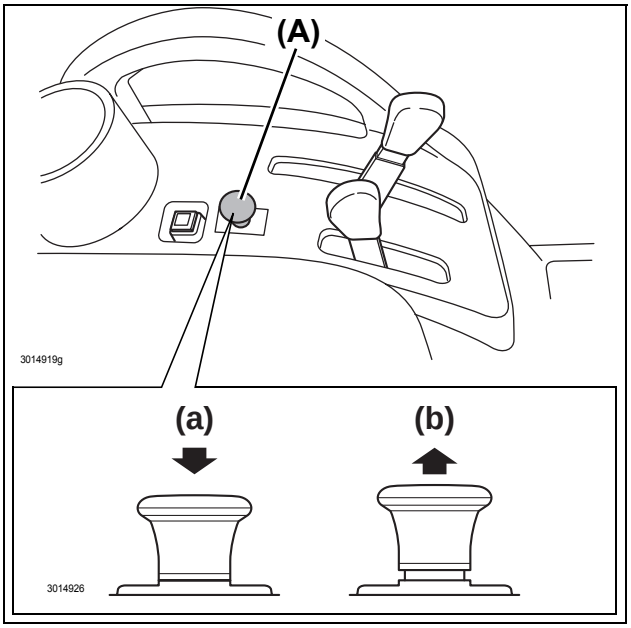


## 7. Fully push the 3-point hitch control / cutting height adjustment lever forward to the lowest position and lower the mid- or rear-mounted implements to the ground.

***(A) 3-point hitch control / cutting height adjustment lever***
*(a) Lowest position*

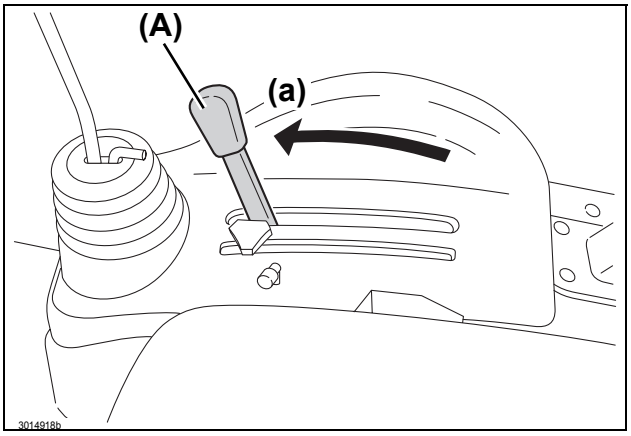


**⚠ CAUTION**

- **In order to prevent a turnover accident, completely lower the implements to the ground.**

## 8. If the tractor has any implements that use the implement control lever, lower them to the ground. Then, set the implement control lever to the NEUTRAL position and push in the implement lock lever to lock.

***(A) Implement control lever***
***(B) Implement lock lever***
*(a) Lower the implement to the ground*

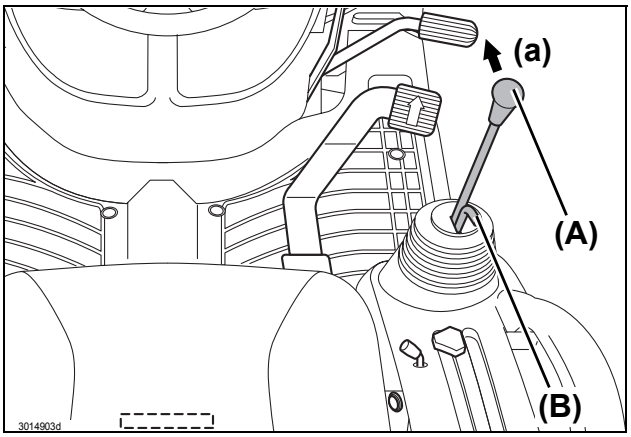

## 9. Set the throttle control lever about halfway.

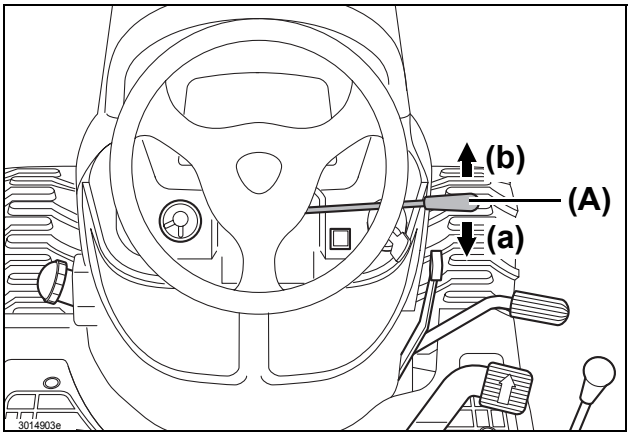


***(A) Throttle control lever***

*(a) To increase the engine speed, pull the throttle control lever backward.*

*(b) To decrease the engine speed, push the throttle control lever forward.*

## 10. Insert the key into the starter key hole and turn the key to the ON position.

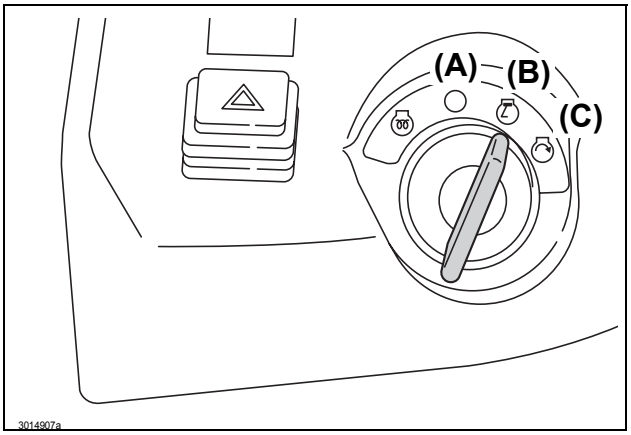


**(A) OFF position:**
The engine must not run.

**(B) ON position:**
When the key has been turned to this position, the engine oil pressure warning light and the alternator / battery charging light and the engine coolant warning light will illuminate.

**(C) START position:**
When the key is turned to this position, the starter starts turning the flywheel and then the engine begins to run. Once the engine has started, release the key.

***(A) OFF position***
***(B) ON position***
***(C) START position***

## ■ Checking the Lights on the Instrument Panel

When the key is turned to the ON position:
1. The engine oil pressure warning light turns ON.
2. The alternator / battery charging light turns ON.

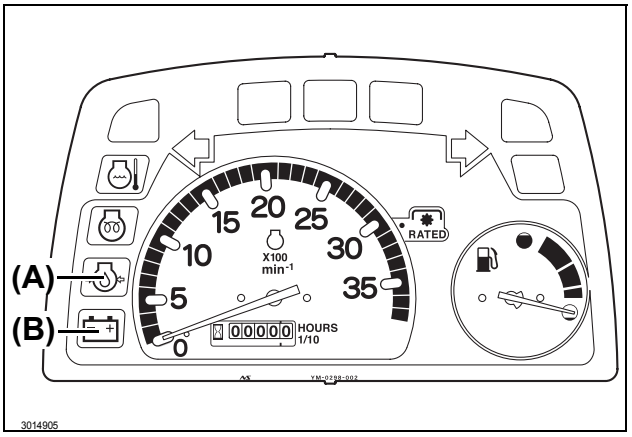


***(A) Engine oil pressure warning light***
***(B) Alternator / Battery charging light***

**NOTE:**

- The engine oil pressure warning light turns off within 5 seconds after the engine is started.
- The alternator / battery charging light turns off within 10 seconds after the engine is started.

**IMPORTANT: Avoid damage.**

- When the engine oil pressure warning light does not turn OFF within 10 seconds after the engine is started, the engine oil pressure is too low. Immediately stop the engine and contact your local Cub Cadet Yanmar dealer for technical assistance.
- When the alternator / battery charging light does not turn OFF within 15 seconds after the engine is started, the power generated by the alternator is too low. Increase the engine speed to its maximum so as to increase the power. If the light still remains lit, immediately stop the engine and contact your local Cub Cadet Yanmar dealer for technical assistance.

### 11. Turn the key to the PREHEATING position and energize the glow plug to preheat the engine.

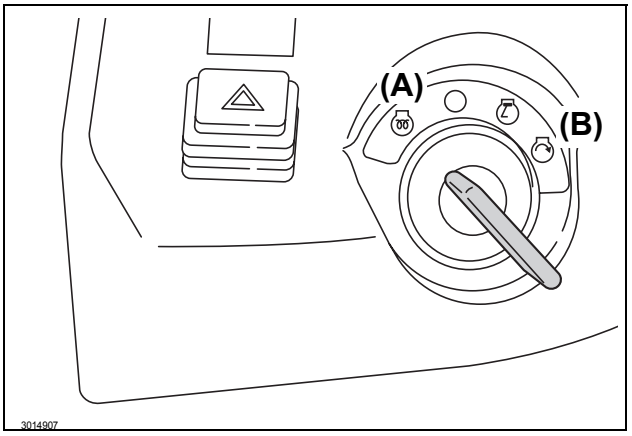


***(A) Preheating position***
***(B) START position***

Preheating time should be determined according to outside air temperature. For details, refer to the table below.

| Temperature (°F (°C)) | Preheating Time (sec.) |
|---|---|
| Over 32 (0) | 2 to 3 |
| Below 32 (0) | 4 |

**NOTE:**

- While turning the key to the preheating position, the preheater pilot light turns ON. Also, the engine oil pressure warning light and the alternator / battery charging light turn ON.

***(A) Preheater pilot light***

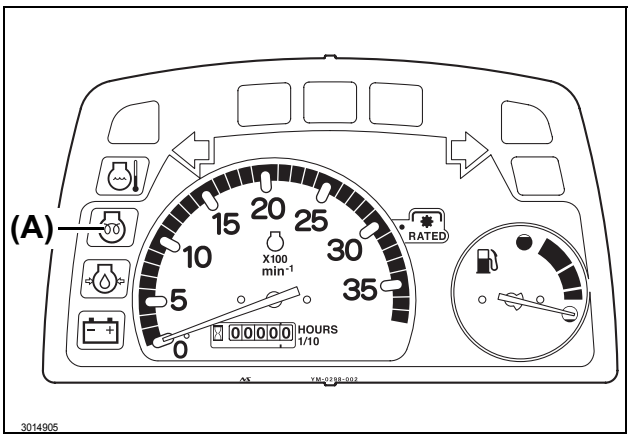


## 12. Turn and hold the key to the START position. After the engine is successfully started, release the key.

**IMPORTANT: Avoid starter damage.**

- Do not hold the key in the START position for more than 15 seconds at a time. Any longer attempt will overheat the starter motor.
- If the engine is difficult to start at a low temperature etc., hold the key in the START position for 30 seconds. If the engine fails to start, wait at least 30 seconds before the second attempt to allow for battery voltage recovery.
- If the engine still fails to start with four consecutive attempts, the starter may be not functioning. (See “17. TROUBLESHOOTING” ).

## 13. After the engine has started, warm up the engine for 5 minutes at 2000 to 2400 rpm without loading.

### ■ Warming Up the Engine in Cold Weather

In cold weather, warm up the engine for much longer than 5 minutes so that the hydraulic system shows its performance. For the appropriate warming up time, refer to the table below.

| Temperature (°F (°C)) | Warming-up Time (min.) |
|---|---|
| Over 32 (0) | At least 5 |
| 32 to 14 (0 to –10) | 5 to 10 |
| 14 to –4 (–10 to –20) | 10 to 15 |
| Below –4 (–20) | More than 15 |

**NOTE:**

- The engine may run slightly louder and emit pale blue exhaust during warming-up. This is considered normal operation. The amount of pale blue exhaust varies depending on the ambient temperature.
- Idling the engine for a long time causes waste of fuel and carbon accumulation in the engine.

## 2. Stopping the Engine

1. **Remove foot from the forward and reverse drive pedal.**
2. **After the tractor has completely stopped, turn off the Power Take Off (PTO) switch, lower the implement (if installed) to the ground and then engage the parking brake securely.**
3. **Run the engine at a lowest possible speed for at least 2 minutes.**
4. **Turn the key to the OFF position.**
5. **Remove the key from the starter key switch.**
6. **Make sure that the engine and other components have stopped running. NEVER leave the operator's seat while any components are running.**

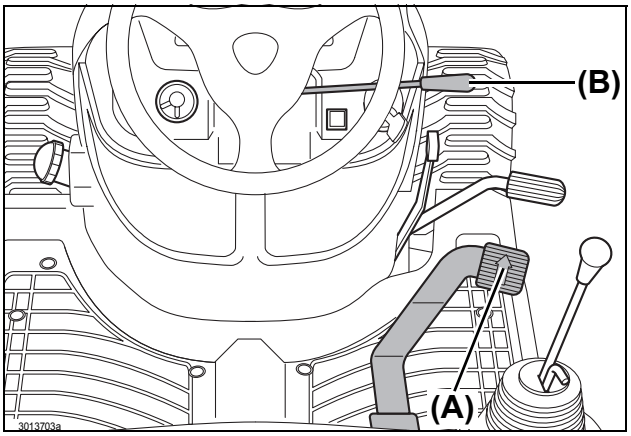


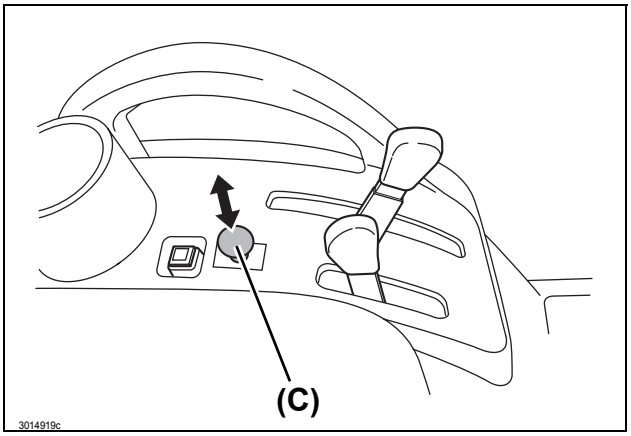


*(A) Forward and reverse drive pedal*
*(B) Throttle control lever*
*(C) Power Take Off (PTO) switch*

## 3. Restarting a Stalled Engine

**IMPORTANT: Avoid engine damage.**

- If the engine stalls while operating under load, immediately restart the engine to prevent overheating of the engine.

**1. Engage the parking brake securely.**

**2. Set the range shift lever to the slow position.**

***(A) Range shift lever***
*(a) Slow position*

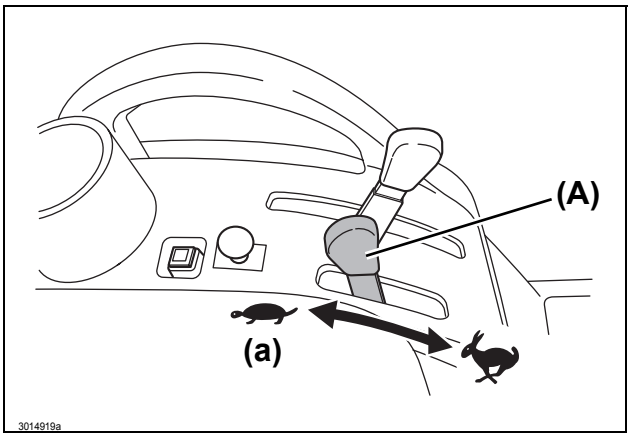


**3. Turn off the Power Take Off (PTO) switch.**

**⚠ CAUTION**

- **To prevent a possible accident, fully lower all the implements to the ground.**

***(A) Power Take Off (PTO) switch***
*(a) OFF position*

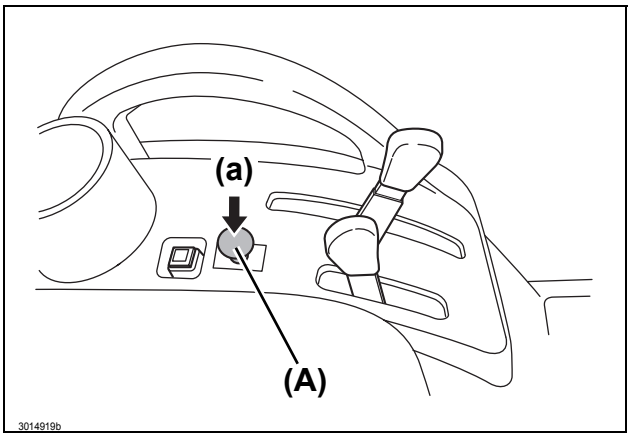


**4. Restart the engine.**
**Resume the operation; or run the engine for 1 to 2 minutes at the lowest possible running speed, and then stop the engine.**

# 8. OPERATING THE TRACTOR

**⚠WARNING**

ALWAYS decrease tractor speed before turning, when traveling on a rough terrain or before stopping to prevent roll-over.

---

Do not attempt to turn with the differential lock engaged. Attempting to turn the tractor while the differential lock is engaged can lead to a roll-over.

---

ALWAYS stay clear of ditches, holes, embankments or ponds. A roll-over can occur more easily if the ground is soft or wet. Before entering an area covered with tall grass, walk the area to detect any obstacles.

---

ALWAYS be extremely careful about the direction you are traveling and avoid obstacles. Remain alert when you are approaching the end of a row, trees or any obstacle.

---

ALWAYS maintain good communication with all others working the same area before and during operation of the tractor.

---

Do not get in or out of the moving tractor.

## Accident Hazard

ALWAYS remain alert to behaviors of children when operating the tractor because they are usually very curious about moving machines.

---

ALWAYS remember that children may have moved from a point you last viewed them.

---

ALWAYS keep children off the work area, and a person other than the operator should always watch them.

---

If any child enters the current work area, stop your tractor immediately.

---

NEVER allow children to ride the moving tractor. They may tamper the controls or can fall off the tractor and be run over by the tractor.

---

NEVER allow children to operate the tractor.

---

NEVER allow children to play on the tractor or implement.

---

ALWAYS be extremely careful when backing the tractor up. Before backing up, look back and below the tractor. Children may be on your path.

# 1. Operating a New Tractor

The service life of the tractor is governed by how adequately it is handled and maintained.
Of course, any newly manufactured tractor has been tested; however, various parts must be broken in. Therefore, operate the tractor at low speeds for the first 50 operating hours, and avoid heavy work or operation before the various parts have been sufficiently run. The manner the tractor is operated in during the breaking-in period greatly affects the effective life of the tractor. Therefore, to develop maximum design performance and attain the longest life of the tractor, the tractor needs to be correctly broken in. Handle the new tractor, strictly observing the following instructions.

## 1. Do not run the tractor at full speed during the first 50 operating hours period

- NEVER suddenly start or brake.
- In cold weather, ALWAYS fully warm up the engine. After warm-up, start operation of the tractor.
- NEVER run the engine at a speed higher than needed.
- On rough roads or terrains, slow the tractor down as necessary. Do not run the tractor at a high speed.

The above-mentioned precautions apply not only to newly manufactured tractors but also to tractors that have been actively used. Nevertheless, we recommend that newly manufactured tractors be operated by strictly observing these instructions / recommendations.

## 2. Changing the lubricating oil for the new tractor

The quality of the lubricating oil in any new tractors is very important. Various parts on a new tractor have not been fully broken in, and are not fully fitted with each other. As a result, small metal shavings may occur while the new tractor is operated, and may lead to premature wear or damage of the associated parts or components. Therefore, Cub Cadet Yanmar recommends that the lubricating oil be changed earlier than in the ordinary oil change schedule.
For the recommended oil change schedule, refer to the “13. MAINTENANCE”.

# 2. Operation of the Tractor

## ⚠CAUTION

**Avoid injury:**

- **Before starting or operating the tractor, always check the area around the tractor for obstacles and any person nearby. Turn off the Power Take Off (PTO) switch and raise the implement.**

**IMPORTANT: Avoid damage.**

- To prevent damage to the transmission, stop the tractor completely before shifting the range shift lever.

### 1. Sit on the seat.

For the adjusting method of the seat position, refer to “Adjusting the Operator's Seat” on page P7-2, and for the fastening method of the seat belt, refer to “Fastening the Retractable Seat Belt” on page P7-2.

### 2. Use the turn signal switch, headlight / work light switch, hazard lights button switch as necessary.

### ■ Turn Signals

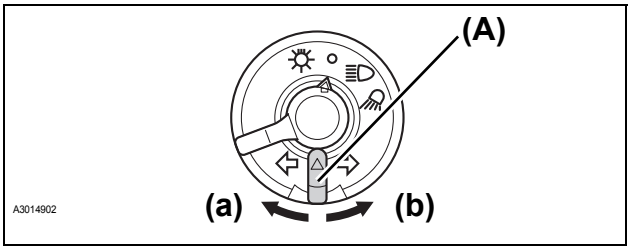


***(A) Turn signal switch***

*(a) Move the turn signal switch to the left to signal a left turn of the tractor.*

*(b) Move the turn signal switch to the right to signal a right turn of the tractor.*

### ■ Headlights / Work Lights

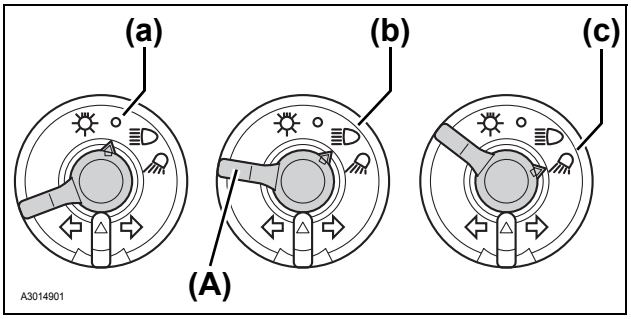


***(A) Headlight / work light switch***

*(a) OFF*

*(b) Turning the blue lever to (b) position illuminates the headlights.*

*(c) Turning the blue lever to (c) position illuminates the headlights and work lights at the same time.*

### ■ Hazard Lights

Pushing the hazard lights button switch will cause the hazard lights to flash.

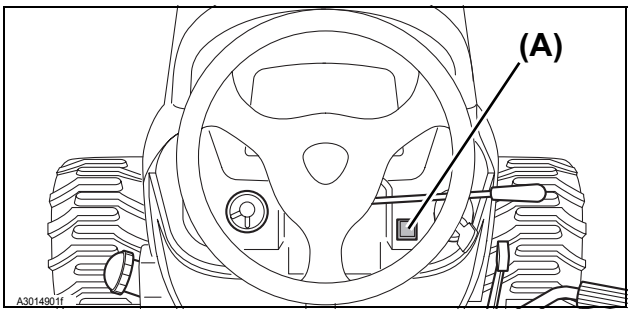


***(A) Hazard lights button switch***

## 3. Start the engine.

Start the engine by referring to “7. OPERATING THE ENGINE”.

## 4. Select travel speed.

### ■ Range Shift Lever

Use the range shift lever to select the speed that best suits the intended operation.

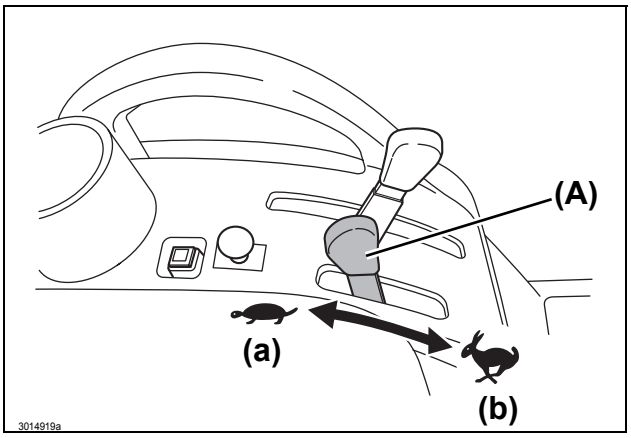


***(A) Range shift lever***
*(a) SLOW : Used for heavy-load operation.*
*Low traveling speed.*
*(b) FAST : Used for light-load operation.*
*High traveling speed.*

### ■ 4-Wheel Drive Lever

In the 4-wheel drive mode, all the four wheels are powered to obtain better traction on difficult-to-travel ground.
The 4-wheel drive lever can be set to the ON or OFF position only when the tractor is at a standstill.

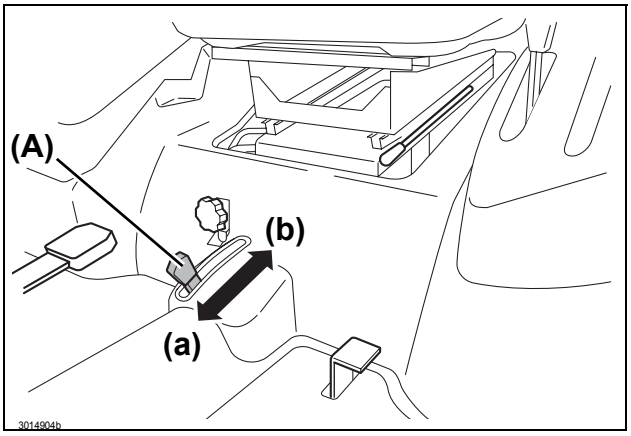


***(A) 4-wheel drive lever***
*(a) 4-wheel drive mode*
*(b) 2-wheel drive mode*

**IMPORTANT: Avoid damage.**

- ALWAYS keep the 4-wheel drive lever in the OFF position when traveling on a paved surface.
- ALWAYS disengage the 4-wheel drive lever when not needed to prevent premature wear of the front tires.
- NEVER install tire chains to the front wheels. Chains will hit and can damage the tractor.
- If disengaging the 4-wheel drive lever is difficult, stop the tractor, turn the steering wheel right and left several times. Then attempt to disengage the 4-wheel drive lever again.
- To minimize tire wear, drive in the 4-wheel drive mode only when absolutely necessary. Driving the tractor on a paved road in the 4-wheel drive mode can accelerate wear of the tires.
- To obtain better traction, keep the front tires at the maximum allowable pressure.
- When the 4-wheel drive lever is in the ON position, braking will apply to all four wheels.

## 5. Adjust the throttle control lever to attain an intended speed.

### ■ Throttle Control Lever

Use the throttle control lever to change the engine speed. While monitoring the tachometer, change the engine speed as required.

***(A) Throttle control lever***
*(a) To increase the engine speed: pull the throttle control lever backward.*
*(b) To decrease the engine speed: push the throttle control lever forward.*

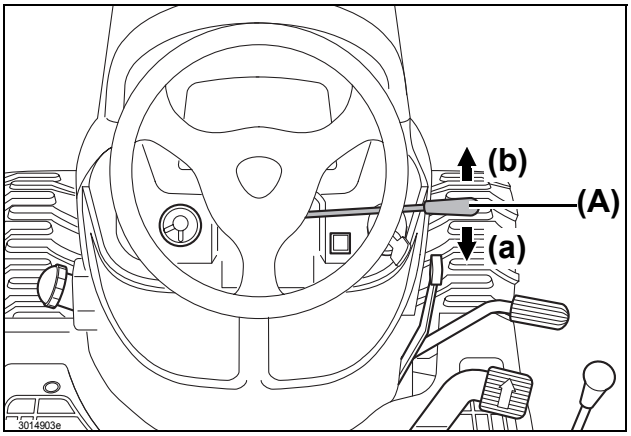


## 6. Raise the implement.

1. Pull the 3-point hitch control / cutting height adjustment lever rearward and raise the mid- or rear- mounted implement to the raised position.

***(A) 3-point hitch control / cutting height adjustment lever***
*(a) Raised position*

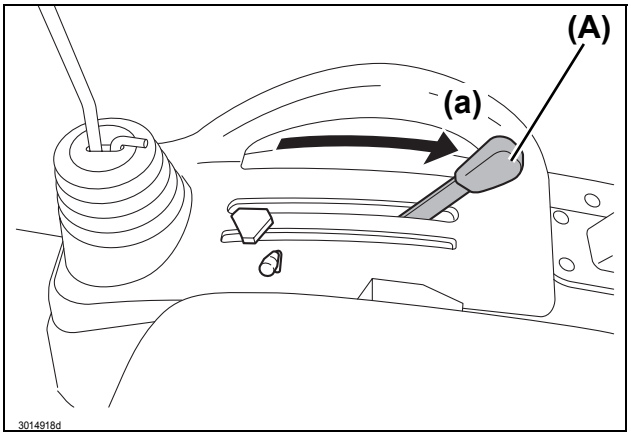


2. If the tractor has any implements (ex. front loader) that use the implement control valve, pull up the implement lock lever to release locking and use the implement control lever to raise the implement.

***(A) Implement lock lever***
***(B) Implement control lever***
*(a) Raising the implement*
*(b) Unlocking*
*(c) Locking*

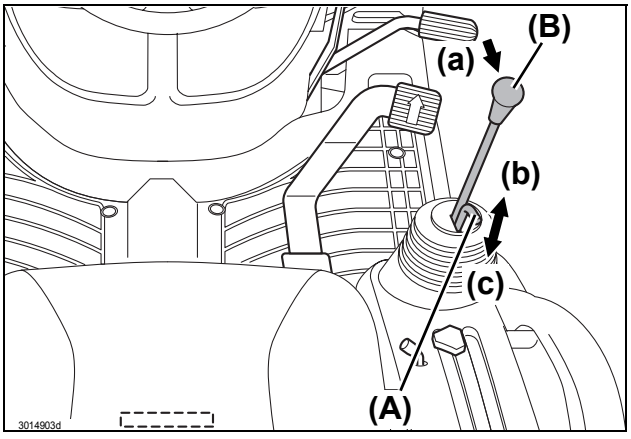

## 7. Disengage the parking brake.

1. Fully depress the brake pedal.
2. Fully push the parking brake lever forward to unlock the parking brake.
3. Remove foot from the brake pedal. Make sure that the brake pedal is unlocked.

***(A) Brake pedal***
***(B) Parking brake lever***

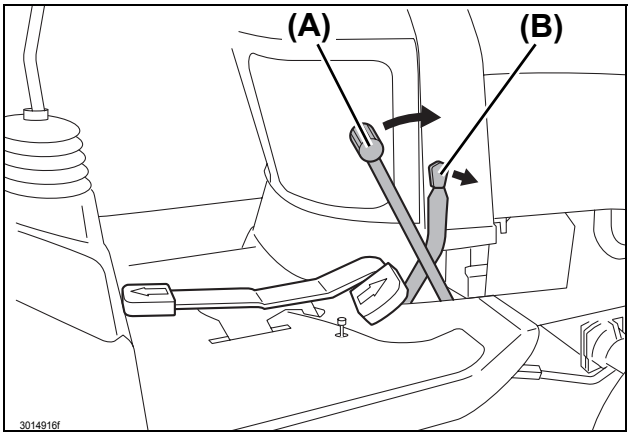


## 8. Remove foot from the brake pedal.

## 9. Slowly depress the forward side of the forward and reverse drive pedal or reverse side of the forward and reverse drive pedal.

### ■ Forward and Reverse Drive Pedal

The tractor accelerated speed depends on how far the drive pedal is pressed.

(A) To move forward:
depress the forward side of the forward and reverse drive pedal.

(B) To move backward:
depress the reverse side of the forward and reverse drive pedal.

***(A) Forward side of the forward and reverse drive pedal***
***(B) Reverse side of the forward and reverse drive pedal***

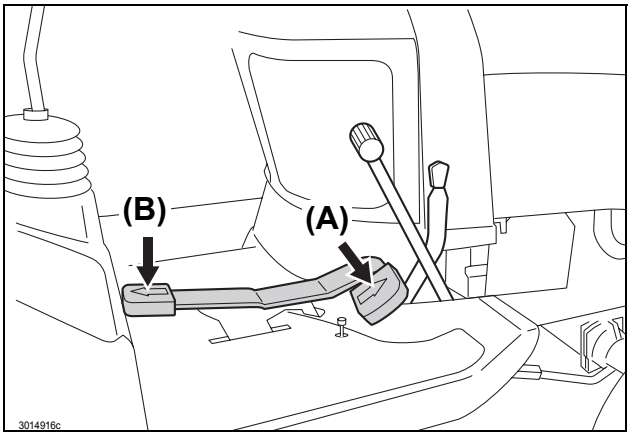


**IMPORTANT:**

- When the drive pedal is released, the transmission will automatically return to the NEUTRAL position.

## 10. Operate the steering wheel and travel to the intended destination.

## 11. Use the cruise control as necessary.

The cruise control is a feature that regulates forward tractor travel to a specific speed.

**NOTE:**

- The cruise control is operative only when the tractor is traveling forward.

## ⚠WARNING

**Avoid injury:**

- **Use the cruise control only when traveling in a vast open area.**
- **Turn OFF this feature before turning the tractor or when in areas that include many obstacles.**

## ■ Engaging the Cruise Control

1. Depress the forward side of the forward and reverse drive pedal until an intended travel speed is reached.
2. Lift up the cruise control lever to engage the cruise control feature.
3. Remove foot from the forward side of the forward and reverse drive pedal.
4. Remove hand from the cruise control lever.

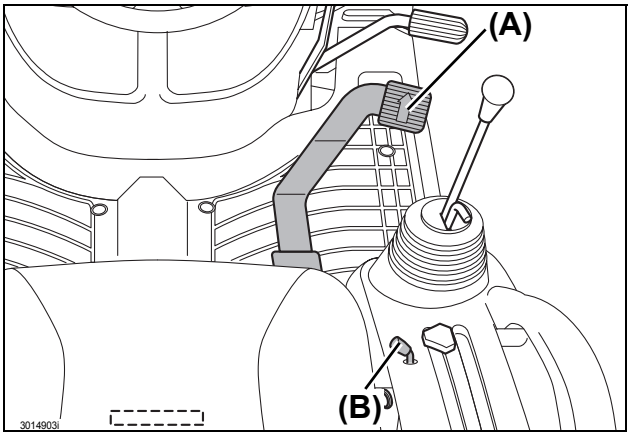


***(A) Forward side of the forward and reverse drive pedal***
***(B) Cruise control lever***

## ■ Disengaging the Cruise Control

1. Depress the brake pedal.
2. Step on the forward side of the forward and reverse drive pedal and make sure the forward and reverse pedal is unlocked.

**NOTE:**

- The cruise control is disengaged when the operator depresses the brake pedal.
- If the cruise control lever is not readily disengaged, then step on the brake pedal several times.
- Also, the cruise control can be disengaged when the operator depresses the forward side of the forward and reverse drive pedal. Note, however, that the reverse side of the forward and reverse drive pedal can not be used for this purpose.
- Do not strongly step on the reverse side of the forward and reverse drive pedal when the cruise control is in the locked state.

## 3. Stopping Travel of the Tractor

1. **Slowly remove foot from the forward side of the forward and reverse drive pedal or reverse side of the forward and reverse drive pedal.**
2. **Fully push the throttle control lever forward to decrease the engine speed.**
3. **Step on and depress the brake pedal.**
4. **After the tractor has completely stopped, turn off the Power Take Off (PTO) switch.**
5. **Lower the implement (if equipped) to the ground.**
6. **Engage the parking brake securely.**
7. **Run the engine at a lowest possible speed for at least for two minutes.**
8. **Turn the key to the OFF position.**
9. **Remove the key from the starter key switch.**
10. **Make sure that the engine and other rotating component(s) have stopped running. NEVER leave the operator's seat while any component is running.**

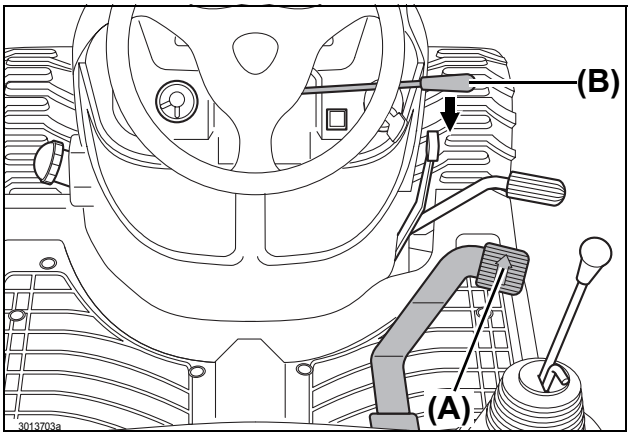


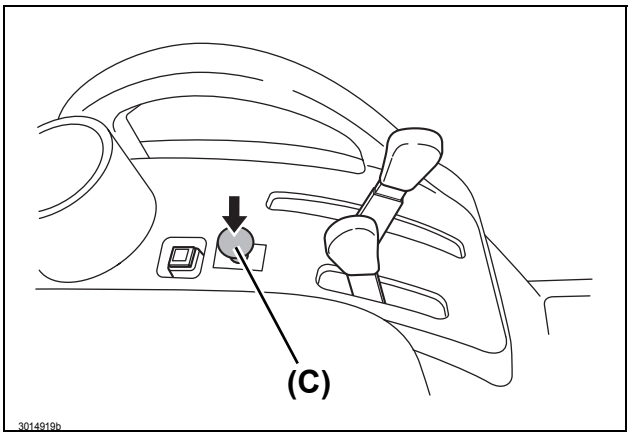


***(A) Forward and reverse drive pedal***
***(B) Throttle control lever***
***(C) Power Take Off (PTO) switch***

### ■ Emergency Stop Procedure

1. Remove foot from the forward side of the forward and reverse drive pedal or reverse side of the forward and reverse drive pedal.
2. Depress the brake pedal.
3. Turn the key to the OFF position.
4. Keep the brake pedal pressed until all the moving parts on the tractor come to a full stop.
5. Engage the parking brake securely.

# 4. Parking the Tractor

## ■ Applying the Parking Brake

### ⚠CAUTION

**Avoid injury:**

- **ALWAYS engage the parking brake securely before leaving the tractor unattended.**

1. Turn off the Power Take OFF (PTO) switch.

***(A) Power Take Off (PTO) switch***

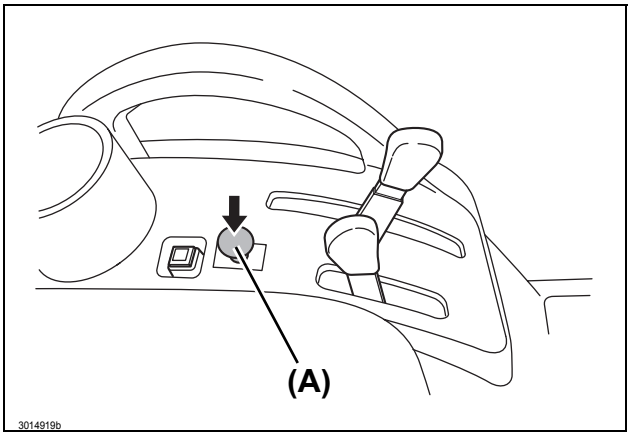


2. Lower the implement to the ground, set the implement control lever to the NEUTRAL position and push in the implement lock lever to lock.
3. Engage the parking brake securely.
4. Turn the key to the OFF position.
5. Remove the key from the starter key switch.
6. Remove foot from the brake pedal. Make sure that the parking brake has been fully engaged.
7. Before leaving the tractor, be fully sure that the tractor is at a standstill.

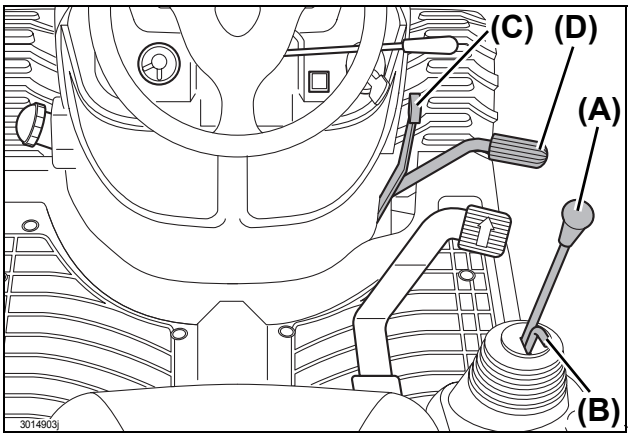


***(A) Implement control lever***
***(B) Implement lock lever***
***(C) Parking brake lever***
***(D) Brake pedal***

**IMPORTANT:**

- NEVER park on a steep slope. ALWAYS park on a solid, flat, level ground whenever possible. If parking on a slope is unavoidable, park the tractor across the slope, and lower the implement to the ground.

## ■ Releasing the Parking Brake

1. Fully depress the brake pedal.
2. Fully push the parking brake lever forward to unlock the parking brake.
3. Remove foot from the brake pedal. Make sure that the brake pedal is unlocked.

# 5. Safe Practices for Operation

## 1. Differential Lock

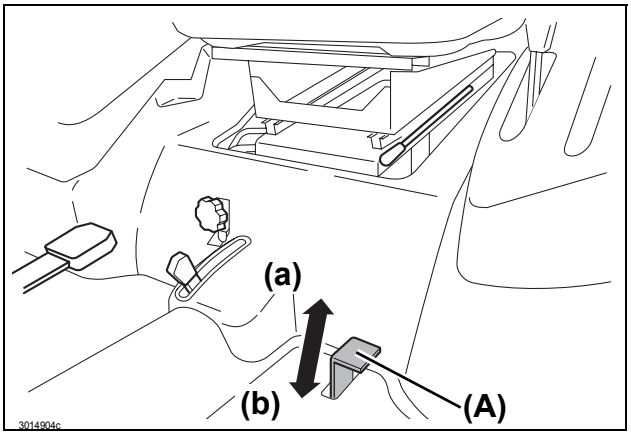


*(A) Differential lock foot pedal*
*(a) disengage*
*(b) engage*

**⚠WARNING**

**Avoid injury. To prevent the tractor from overturning:**

- **Do not attempt to turn with the differential lock engaged.**
- **Do not engage the differential lock while the tractor is traveling at a high speed.**

The differential lock is actuated to provide greater traction when rear wheels begin to slip. Engaging the differential lock will cause the right and left rear axles to be locked and simultaneously rotate at a same speed, allowing the tractor to develop maximum traction force.

**IMPORTANT: Avoid damage.**

- To prevent damage to the differential gears, NEVER engage the differential lock while the tractor is traveling at a high speed, or when only one wheel is rotating.
- The differential lock is designed to be used for short durations. Its prolonged use can damage the differential gears.

### ■ Engaging the Differential Lock

1. Stop or slowly drive the tractor.
2. Depress the differential lock foot pedal.

### ■ Disengaging the Differential Lock

Remove foot from the differential lock foot pedal.

**IMPORTANT:**

- When using the differential lock, decrease the engine speed.
- To prevent transmission damage, do not use the differential lock when only one rear wheel is rotating.
- If the differential lock does not disengage when the foot is removed from the differential lock foot pedal, lightly step on the brake pedal several times.

## 2. Safely Driving the Tractor on Roads

**⚠WARNING**

**Avoid injury. Be cautious when driving the tractor at a transport speed:**

- **We recommend that the user / operator use the turn signal / hazard lights when traveling on public roads. Before operating the tractor on a public roadway, be aware of relevant state or local regulations in effect. An implement safety lighting kit is available from your local Cub Cadet Yanmar dealer.**
- **If local laws permit road travel, flash the hazard lights and display the Slow Moving Vehicle (SMV) emblems when traveling on public roadways.**

When operating the tractor on a road, strictly observe the following precautions:

- ALWAYS ensure that the Slow Moving Vehicle (SMV) emblem and hazard lights are clean and clearly visible. If a towed or rear-mounted implement jeopardizes visibility of these safety devices, install the Slow Moving Vehicle (SMV) emblem and hazard lights on the implement.

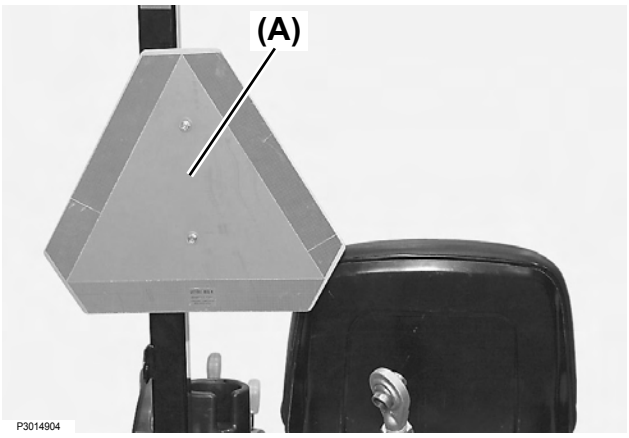


***(A) Typical example of installed Slow Moving Vehicle (SMV) emblem***

- Turn the hazard lights and headlights ON, unless prohibited by law.
- Drive the tractor slowly so that the tractor is under control at all times. Slow down for travel on a slope, rough road, sharp turns or when transporting a heavy rear-mounted implement.
- Disengage the 4-wheel drive to prevent excessive tire wear.
- NEVER coast downhill.
- Check whether the front wheel gearing is engaged.
- Remember that the braking characteristics differ between the 2- and 4-wheel drive modes. ALWAYS be aware of the current drive mode and use properly.
- ALWAYS slow down before turning. High-speed turns may cause the tractor to tip over.
- Strictly observe all the currently effective local traffic and safety laws and regulations.
- ALWAYS travel at a speed that allows the tractor to remain controlled and stable.
- Avoid engaging differential lock while traveling on a road. Your tractor can lose control.

- While traveling on a road, do not suddenly turn the steering wheel. Such an action can lead to loss in the stability of the tractor, and can cause an extremely dangerous situation.
- While on a road, NEVER attempt to operate an implement. Keep the 3-point hitch in the raised position during transport.

## 3. Moving the Tractor Manually while the Engine is Stopped

**⚠WARNING**

**Avoid injury:**
**Setting the Hydro Static Transmission (HST) pressure release lever to the ON position makes the tractor freely move.**

- **Do not operate the Hydro Static Transmission (HST) pressure release lever on a slope. Setting the Hydro Static Transmission (HST) pressure release lever to the ON position on the slope makes the axles freely move, so that the tractor will be out of control.**
- **Before setting the Hydro Static Transmission (HST) pressure release lever to the ON position, park the tractor in a flat place and engage the parking brake securely.**

**⚠WARNING**

- **Do not operate the Hydro Static Transmission (HST) pressure release lever while the engine is running.**

**IMPORTANT: Avoid damage.**

Moving the tractor in an improper way may damage the transmission. Move the tractor by hand only.

- Do not move the tractor with using other machine.
- Do not tow the tractor.

## ■ Hydro Static Transmission (HST) pressure release lever

Hydraulic pressure in the Hydro Static Transmission (HST) brakes the axles when the engine is not running, so that the tractor cannot be moved.
When the hydraulic pressure in the transmission is released by pressing the Hydro Static Transmission (HST) pressure release lever, the tractor can be moved.
To move the tractor, observe the following procedure:

1. Make sure that the engine is stopped.
2. Tilt the seat forward.

***(A) Seat***

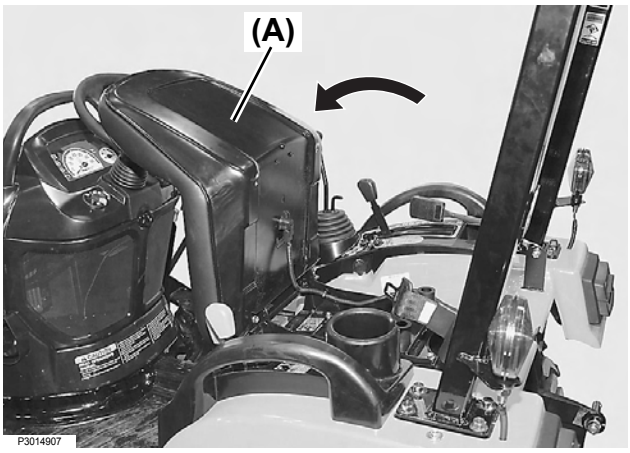


3. Fully depress the Hydro Static Transmission (HST) pressure release lever.

***(A) Hydro Static Transmission (HST) pressure release lever***

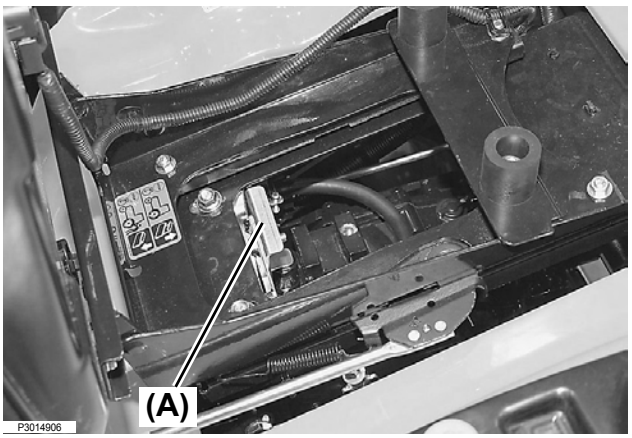


4. Disengage the parking brake.
5. Move the tractor.
6. After moving the tractor, fully pull up the Hydro Static Transmission (HST) pressure release lever.
7. Engage the parking brake securely.

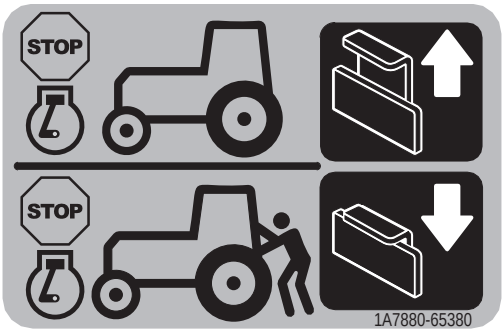

## 4. Transporting the Tractor on a Trailer

**⚠WARNING**

**Avoid injury:**

- **Exercise extreme care when loading or unloading the tractor to or from a trailer or truck.**
- **Close the fuel shut-off valve.**

**NOTE:**

- Use a heavy-duty trailer to transport the tractor.

1. Drive the tractor forward onto the trailer.
2. Lower any implement onto the trailer deck.
3. Engage the parking brake securely.
4. Turn off the engine.
5. Remove the key from the starter key switch.
6. Close the fuel shut-off valve.
7. Tie down the tractor to the trailer with heavy-duty straps, chains or cables. Direct both front and rear straps down and outward from the tractor.

**IMPORTANT:**

- The trailer must have signs and lights required by law.
- During transporting the tractor on a trailer, the Slow Moving Vehicle (SMV) emblem may have to be removed by the local law. For the details, please consult with your local Cub Cadet Yanmer dealer.

## 5. Operating on Slopes

**⚠WARNING**

**Avoid injury. Be extremely cautious when driving the tractor on a slope:**

- **To increase the traction power and provide 4-wheel braking feature, engage the 4-wheel drive lever before driving the tractor on a slope. Remember that although the 4-wheel drive lever greatly assists in approach to a steep slope, there is greater possibility of a tip over.**
- **To improve braking power on sloped, frozen, wet or graveled surfaces, engage the 4-wheel drive lever. Add ballast to the tractor as necessary and travel at a lower speed to prevent skidding and loss of steering control.**
- **While driving the tractor, do not attempt to climb a slope that is steeper than 11 degrees.**
- **Even on a slope that is not steeper than 11 degrees, do not turn or change the traveling direction, or park square to the slope.**

**⚠WARNING**

- **Before approaching a slope, select an appropriate speed setting. NEVER shift on a slope. Be sure to travel at a lower speed on a slope.**
- **Suddenly starting the tractor on an uphill can cause the front wheels to jump off the ground, and this situation poses an extreme danger. To avoid this problem, run the engine at a lower speed and slowly start the tractor in motion.**
- **NEVER park the tractor on a slope. If parking on a slope is unavoidable, chock the tires, and pull the parking brake lever to engage the parking brake securely.**
- **On a slope, the tractor is unstable and more prone to tip-over, possibly leading to severe injury or even death. Remain very cautious when your tractor is on any slope.**
- **To avoid tip over, move backward on a steep slope. If backing on the slope is not comfortable, do not attempt to continue. Avoid an extremely steep slope.**
- **When exiting a ditch, deep mud or traveling on a steep slope, the risk of the tractor roll-over is high. In four-wheel drive mode, special caution is needed.**
- **Slowly move on any slope. NEVER change speed or direction quickly.**
- **When backing up a slope, keep the tractor parallel with the gradient of the slope.**

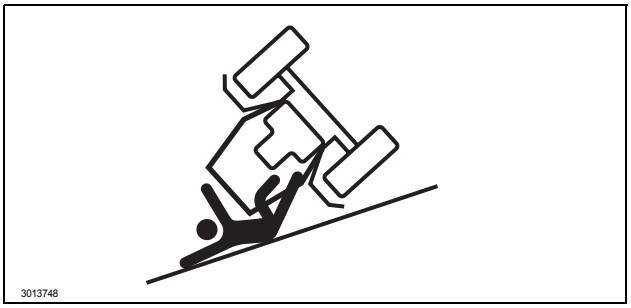

1. Before approaching a slope, set the range shift lever to the slow position.

***(A) Range shift lever***
*(a) Slow position*

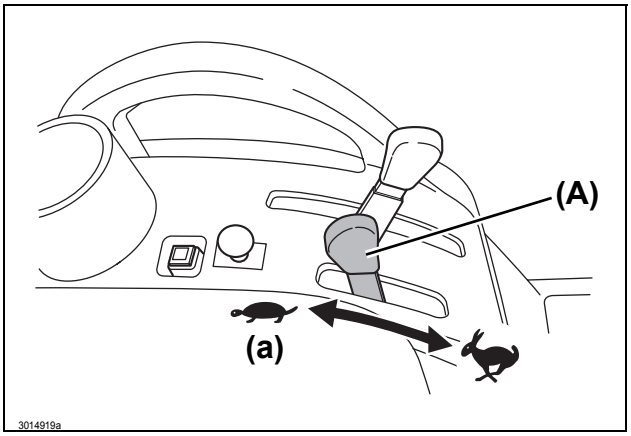


2. Lightly depress the forward side of the forward and reverse drive pedal to start moving.

**IMPORTANT:**

●Always slowly drive the tractor on a slope.

3. ALWAYS travel slowly on a slope.
4. Drive the tractor according to the type of a slope, as instructed below:

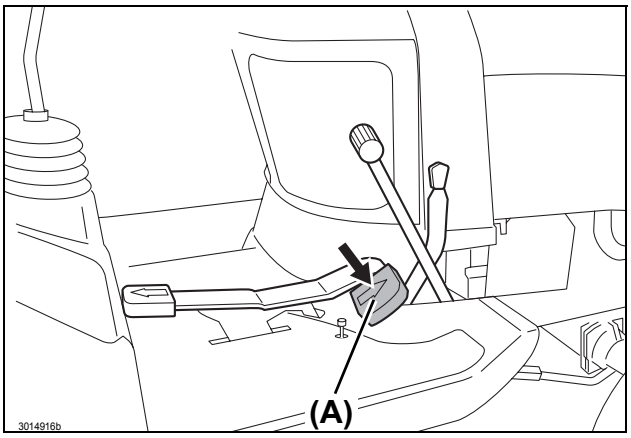


## ■ Uphill / Downhill

Make sure that the range shift lever is in the slow position. Run the engine at a lower speed.

## ■ Steep Downhill

To be able to apply the engine brake, turn the range shift lever to the slow position.

***(A) Forward and reverse drive pedal***

## 6. About the Power Steering

**⚠WARNING**

- **NEVER operate the steering wheel suddenly, especially while traveling on a paved road. Otherwise, an accident can occur.**

The power steering feature is operative only when the engine is running. Note that when the engine is running at a lower speed, the steering wheel will need slightly greater force. This is considered normal operation.

**IMPORTANT:**

- Fully turning the steering wheel will cause the relief valve to trip and an audible signal will sound. This situation may be ignored only for a short duration. NEVER operate the steering in relief for a prolonged period.
- Turning the steering wheel while the tractor is not running can promote damage on the tires and rims. Avoid such an action whenever possible.

## 7. About the 12V DC Outlet

This can be used when the key switch is in "ON" position.
It can be used as a power source for electrical goods.

**IMPORTANT: Avoid damage.**

- Do not connect a light or load of more than 120 watts.
- Do not use as a cigarette lighter.
- Do not use when wet.
- Long-term usage of the 12V DC outlet with the engine stopped causes the battery to run out.

# 9. POWER TAKE OFF (PTO)

**⚠WARNING**

ALWAYS ensure all moving components have stopped rotating before connecting, disconnecting, adjusting, cleaning or servicing any Power Take Off (PTO)-driven implement.

ALWAYS follow the Power Take Off (PTO)-driven implement operation manuals and safety decals and instructions before installing or operating any Power Take Off (PTO)-driven implements.

ALWAYS ensure the Power Take Off (PTO) shaft cover is installed. NEVER replace the Power Take Off (PTO) shaft cap when the shaft is moving.

ALWAYS engage the parking brake securely and put wheel chocks in front and behind the rear wheels before connecting or disconnecting any Power Take Off (PTO)-driven implements. NEVER approach or touch any rotating component.

## 1. Operating the Power Take Off (PTO)

**⚠WARNING**

**Be careful to avoid injury:**

- Before connecting, disconnecting, adjusting or cleaning any Power Take Off (PTO)-driven implement, be sure to disengage the Power Take Off (PTO), stop the engine, and make sure that all the components have stopped their rotation.
- Do not approach rotating drivelines.
- Entanglement with rotating driveline can lead to serious injury or even death.
- Keep hands, feet and clothing away from the rotating driveline.
- Make sure that all shields and guards are in position and are correctly used.

**⚠CAUTION**

- **Do not run the engine at 3338 rpm or more while the Power Take Off (PTO) is engaged.**

## ■ Rear- Power Take Off (PTO)

*(A) Rear- Power Take Off (PTO) shaft*

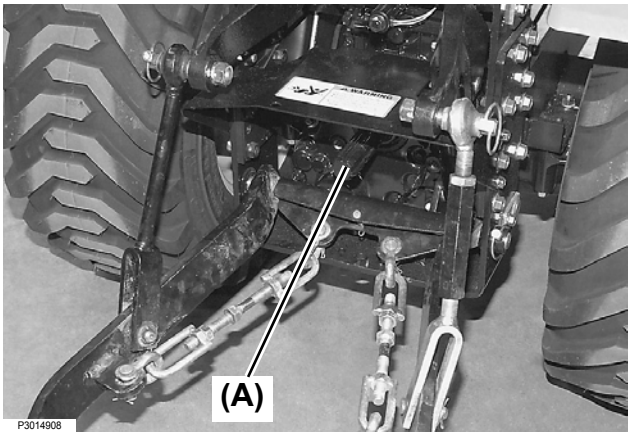


## ■ Mid- Power Take Off (PTO)

*(A) Mid- Power Take Off (PTO) shaft*

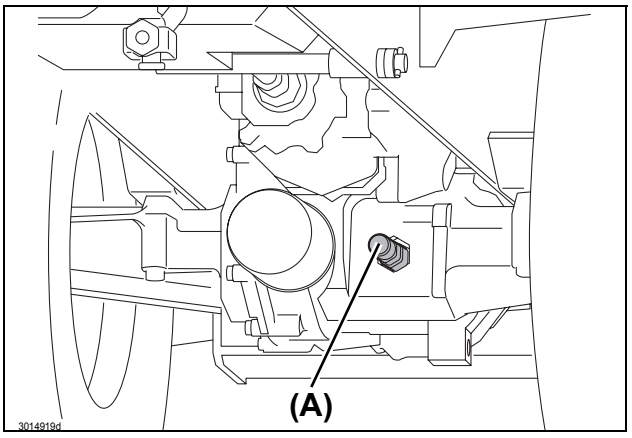


## ■ Engaging the Power Take Off (PTO)

**NOTE:**

- This tractor cannot drive the Power Take Off (PTO) unless the operator sits on the seat. When the operator leaves the seat while the Power Take Off (PTO) is engaged, the safety interlock system stops the implement and the engine.
- Normally, reversing the tractor stops the Mid-Power Take Off (PTO) and the Rear-Power Take Off (PTO). To drive the Power Take Off (PTO) while reversing the tractor, use the reverse-override-switch.

*(A) Reverse-override-switch*

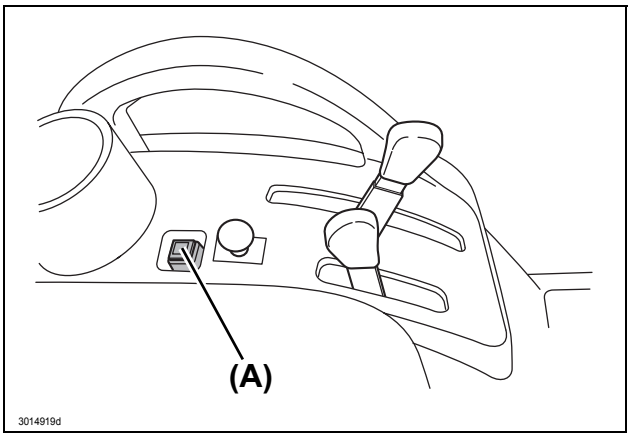

1. Sit on the operator's seat.
2. Engage the parking brake securely.

***(A) Parking brake lever***

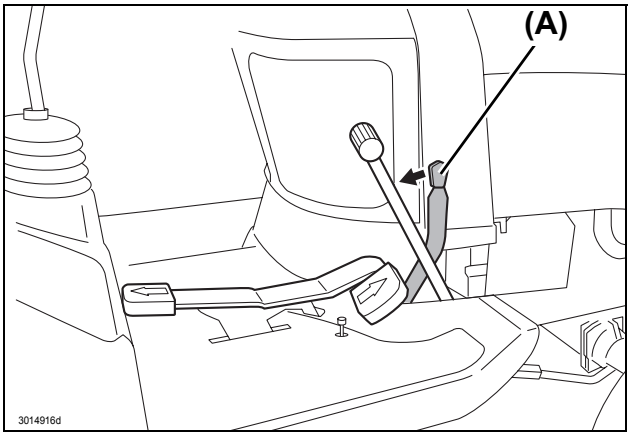


3. Push in the Power Take Off (PTO) switch to set it to the OFF position.

***(A) Power Take Off (PTO) switch***
*(a) OFF position*
*(b) ON position*

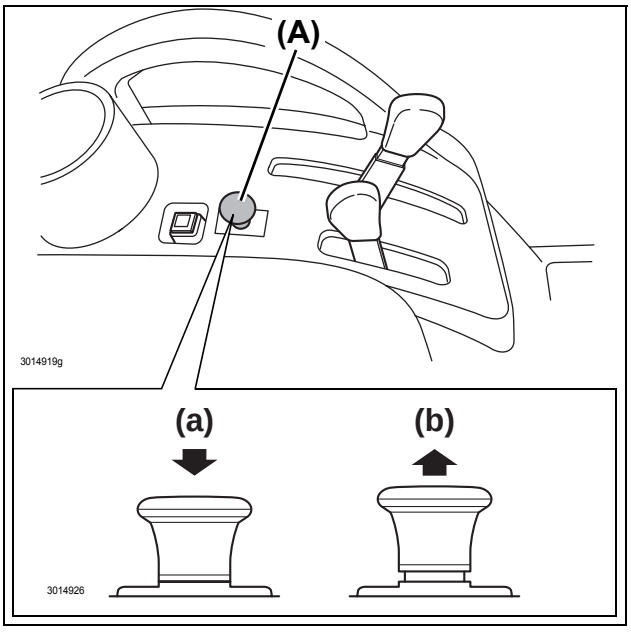


4. Start the engine.
5. Adjust the engine speed to 1500 rpm or lower.

**IMPORTANT:**

- In order to reduce any shock at the time of driving the Power Take Off (PTO), make sure to reduce the engine speed before turning ON the Power Take Off (PTO) switch.

6. According to an implement to be used, operate the Mid- / Rear-Power Take Off (PTO) select lever.

***(A) Mid- / Rear-Power Take Off (PTO) select lever***
*(a) Operating the Mid-Power Take Off (PTO) alone*
*(b) Operating the Mid-Power Take Off (PTO) and the Rear-Power Take Off (PTO) at the same time*
*(c) Operating the Rear-Power Take Off (PTO) alone*

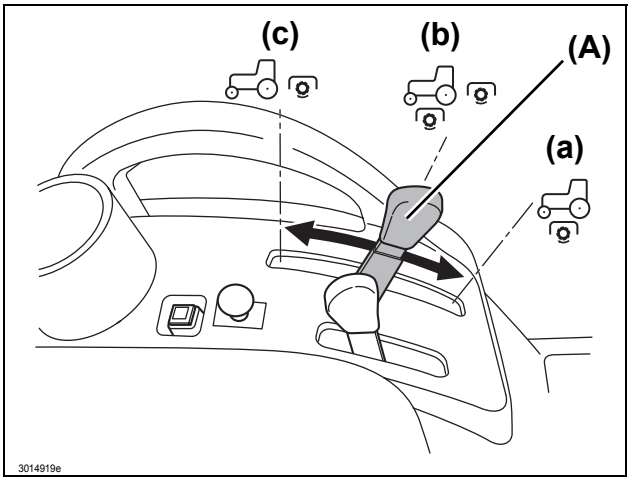


7. Pull up the Power Take Off (PTO) switch to set it to the ON position.

8. While watching the instrument panel, adjust the engine speed suitable for operating with the throttle control lever.

***(A) Throttle control lever***

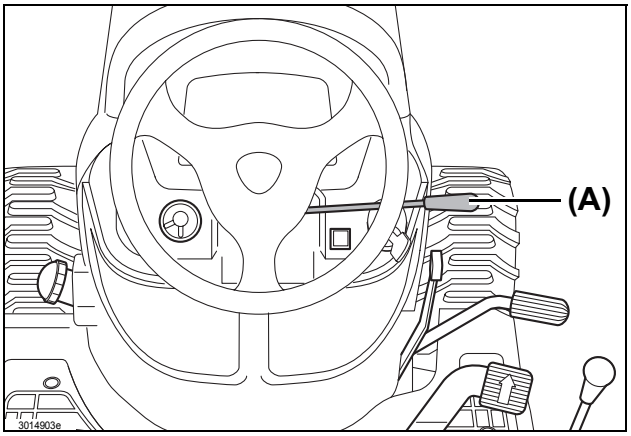


**NOTE:**

- When the engine speed is 3300 rpm, the Mid-Power Take Off (PTO) rotates at approximately 2100 rpm.
- When the engine speed is 3100 rpm, the Rear-Power Take Off (PTO) rotates at approximately 540 rpm.

## ■ Disengaging the Power Take Off (PTO)

1. Run the engine at a low speed.
2. Push in the Power Take Off (PTO) switch to set it to the OFF position.

***(A) Power Take Off (PTO) switch***
*(a) ON position*
*(b) OFF position*

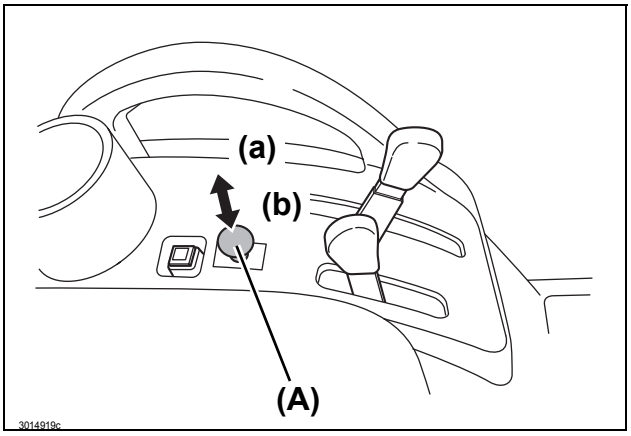

## 2. Installing an Implement to the Power Take Off (PTO) Drivelines

**IMPORTANT: Avoid damage.**

- Observe the driveline manufacturer's installation instructions for driveline mounting angle and the length of overlaps on the two-part driveline shafts. An incorrectly installed implement can promote wear of the driveline and/or damage the tractor.

## 3. Operating the Power Take Off (PTO) while the Tractor is Traveling in the Reverse Direction (Reverse Override Function)

### ⚠WARNING

- **Use EXTREME caution to check that anyone or any object is not present in the rear area when using the Power Take Off (PTO) in reverse movement.**

Normally, reversing the tractor stops the Mid-Power Take Off (PTO) and the Rear-Power Take Off (PTO). To drive the Power Take Off (PTO) while reversing the tractor, observe the following instructions:

1. Press the reverse-override-switch to enable the reverse override function.
2. The switch illuminates and the Mid-Power Take Off (PTO) and the Rear-Power Take Off (PTO) can be driven during reverse movement.

***(A) Reverse-override-switch***

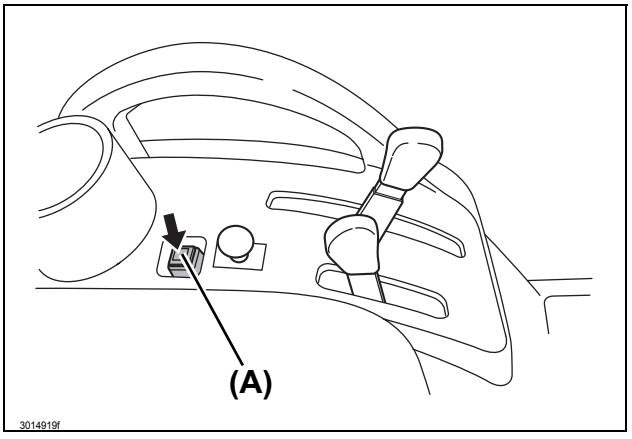


### ⚠CAUTION

- **Once the reverse-override-switch is activated, the reverse override function cannot be disabled unless the engine is stopped.**

# 10. 3-POINT HITCH

**⚠WARNING**

ALWAYS install an appropriate counterbalance to the front of the tractor, if necessary, when using a 3-point hitch-mounted implement.

During transportation, put the 3-point hitch control / cutting height adjustment lever in its raised position and lock it with the position stop knob. Do not fully close the hydraulic flow control / stop knob.

ALWAYS use implements designed for a 3-point hitch. NEVER use unapproved implements with the 3-point hitch. Contact your local Cub Cadet Yanmar dealer for technical assistance.

## 1. Adjusting the 3-Point Hitch

**⚠CAUTION**

**Avoid injury:**

- **Make sure to stop the engine and then remove the key. Make sure that the engine has been stopped completely.**
- **Make sure that no other parts are moving. If any part or component is still moving, wait until it comes to complete stop.**
- **Installation / removal of an implement must be performed in a flat and solid place.**
- **After the implement and the 3-point hitch have been installed, check for possible interference with the Power Take Off (PTO) shaft and other machine components. If interference is found, correct it.**

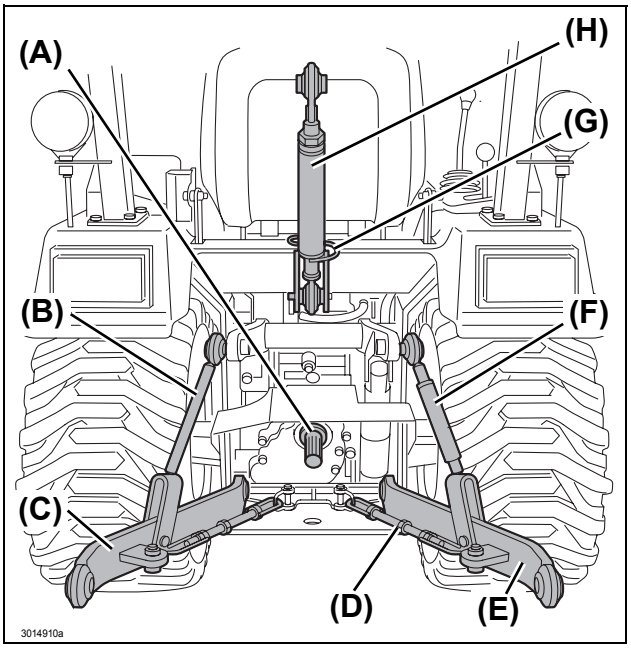


*(A) Rear-Power Take Off (PTO) shaft*
*(B) Left lift link*
*(C) Left lower link*
*(D) Sway links*
*(E) Right lower link*
*(F) Right lift link*
*(G) Top link retainer*
*(H) Top link*

## ■ Right Lift Link

**⚠WARNING**

- **Chock the four wheels to secure the tractor, before servicing the right lift link.**

1. Lower the rear-mounted implement.
2. Safely stop the machine.
3. Loosen the locknut.
4. Turn the turnbuckle to adjust the right lift link length until the implement mounted to the 3-point hitch is level.
5. Retighten the locknut.

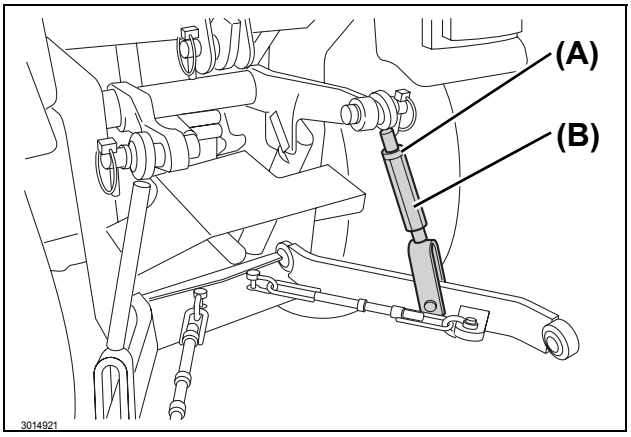


***(A) Locknut***
***(B) Turnbuckle***

## ■ Top Link

For adjusting the posture of the implement, use the top link. The posture can be adjusted by turning the turnbuckle to elongate or contract the link. Installation position and length of the top link depend on the implement. Adjust them according to the instruction manual of the implement.

## ■ Sway Link

Adjust lateral sway of the implement by turning the turnbuckle of the sway links to elongate or contract the sway links.

1. Lower the rear-mounted implement.
2. Safely stop the machine.
3. Loosen the locknut.
4. Adjust the sway link length by turning the turnbuckle, so that the implement has proper lateral sway.
5. After adjusting the lateral sway of the implement, tighten the locknut.

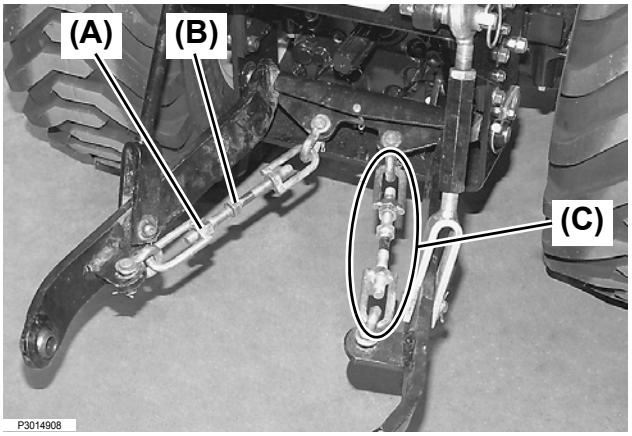


***(A) Locknut***
***(B) Turnbuckle***
***(C) Sway link***

## ■ Hitch

**⚠WARNING**

- **Do not tow anything by the use of the top link or rear axle. Otherwise, the tractor can tip over to cause serious injury or death.**
- **The hitch hole should only be used for towing light loads.**
- **For maximum allowable weight to be towed, refer to "4. IMPLEMENT CAPACITIES".**

# 11. HYDRAULIC SYSTEM

**⚠WARNING**



ALWAYS fully release the internal hydraulic pressure before disconnecting a hydraulic line. ALWAYS ensure that all connections are tight and all the hydraulic lines, pipes and hoses are free from wear or damage.

## 1. 3-Point Hitch Control System

**IMPORTANT:**

- NEVER operate the 3-point hitch control / cutting height adjustment lever before the engine has been sufficiently warmed up.
- If the 3-point hitch control / cutting height adjustment lever is operated before the engine has been warmed up, the hydraulic system can be damaged or develop a failure.
- If abnormal hydraulic noise occurs after the 3-point hitch has been raised, then misadjustment or failure of the hydraulic system should be suspected. In such a case, immediately stop operation and request your local Cub Cadet Yanmar dealer to service or repair the tractor.

### ■ Operating the 3-Point Hitch Control / Cutting Height Adjustment Lever to Raise or Lower the 3-Point Hitch

Use the 3-point hitch control / cutting height adjustment lever, when raising or lowering the Mid- or Rear-mounted implement.

1. Shift the 3-point hitch control / cutting height adjustment lever to the intended position.
2. Adjust the position stop knob to set the lowest position of the implement to the desired height.

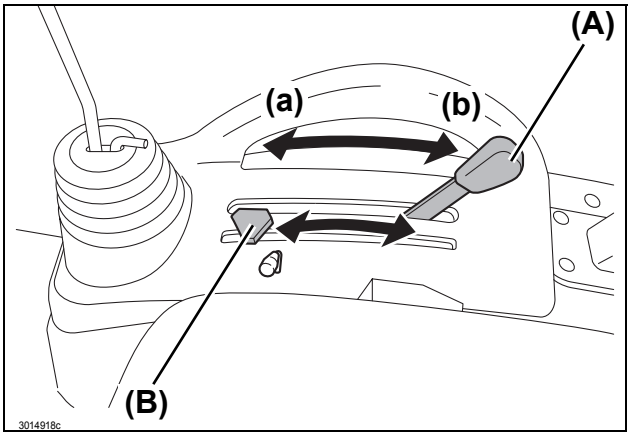


***(A) 3-point hitch control / cutting height adjustment lever***
***(B) Position stop knob***
*(a) Moving the 3-point hitch control / cutting height adjustment lever forward will lower the implement.*
*(b) Moving the 3-point hitch control / cutting height adjustment lever backward will raise the implement to raise higher.*

## ■ Hydraulic Flow Control / Stop Knob

**⚠WARNING**

- **Lowering the 3-point hitch too fast can lead to accident or failure.**
- **Adjust the hydraulic flow control / stop knob so that the time for lowering the implement from the highest position to the lowest position becomes 2 seconds or longer.**

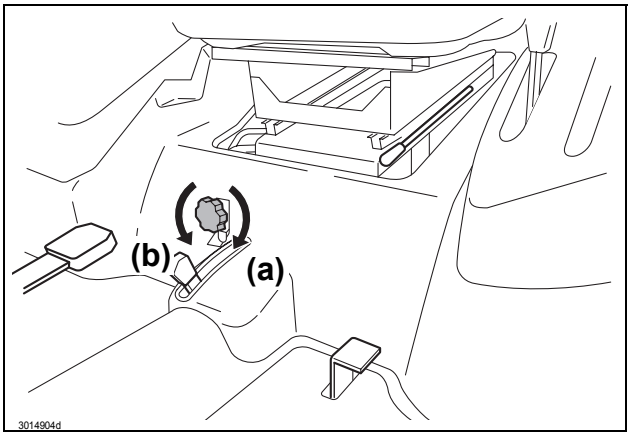


The lowering speed of the lower link is governed by the position of the hydraulic flow control / stop knob. Also, this knob is used to stop the lower link at an intended position.

*(a) Turning the knob clockwise will cause the lowering speed to decrease.*
*Tighten the knob by fully turning clockwise to stop the lower link.*
*(b) Turning the knob counterclockwise will cause the lowering speed to increase.*

**⚠WARNING**

**Be careful to avoid injury:**

- **NEVER use the hydraulic flow control / stop knob for holding an implement in the raised position for maintenance. Loss of hydraulic pressure may cause the implement to drop suddenly. Lower the implement onto solid blocks or remove before starting any maintenance.**

**IMPORTANT:**

- For prolonged loader work with a weight attached to the lower link, raise the lower link to any position and fully tighten the hydraulic flow control / stop knob.

# 2. Controlling the Implement Control Valve (Option)

## ■ Implement Control Valve (Option)

### ⚠DANGER

**Avoid injury:**

- **Escaping high pressure oil can penetrate the skin and cause severe injury. Avoid this hazard by relieving pressure prior to connection of hydraulic or other high pressure lines. Retighten all the connections before applying pressure.**
- **Use a piece of cardboard to detect leaks. Protect hands and body against high pressure fluids.**
- **If an accident should occur, immediately seek medical attention. Any high pressure fluid injected into the skin must be surgically removed within a few hours; otherwise, gangrene may occur.**

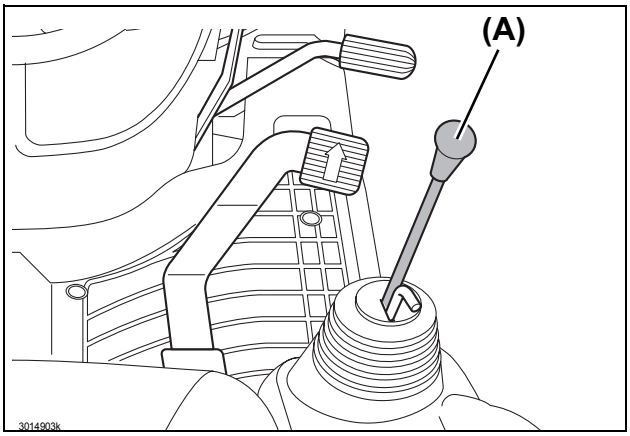


***(A) Implement control lever***

These couplers are used in pairs of 1 and 2, and 3 and 4. If, after the couplers and hydraulic lines have been connected, the connected implement moves in a direction opposite to an expected direction, then connect the coupler 1 to the hydraulic line that was previously connected to the coupler 2, and connect the coupler 2 to the hydraulic line that was previously connected to the coupler 1. Repeat this procedure for the couplers 3 and 4.

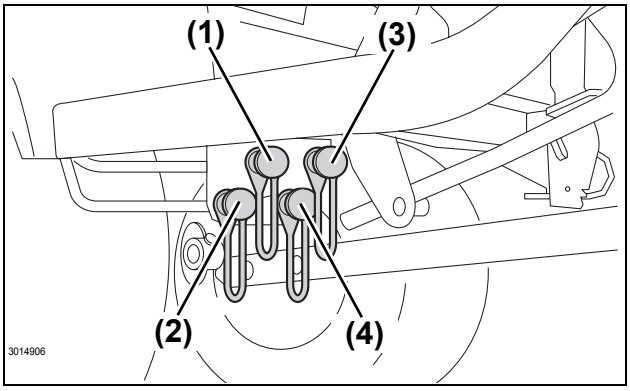


***(1)-(4) Hydraulic quick coupler***

**IMPORTANT:**

- NEVER connect the coupler 1 to the coupler 3, or the coupler 2 to the coupler 4. Contact your local Cub Cadet Yanmar dealer for technical assistance.

## ■ Implement Control Lever (Option)

The implement control valve has a “float” position. When the implement control valve is in this position, implements such as blades or loaders, lowered to the operating position, are allowed to follow ground contours.
Push the implement control lever forward beyond the valve detent position to the “float” position.

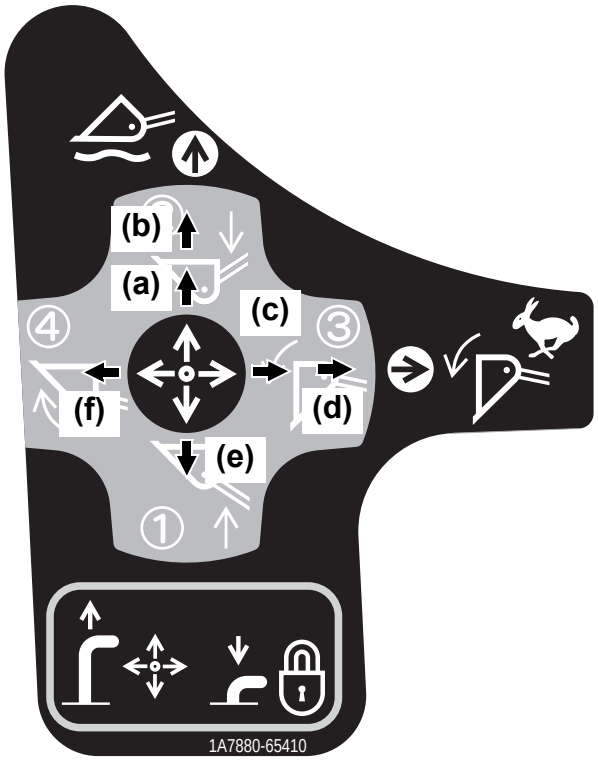


*(a) Lower*
*(b) “Float”*
*(c) Dump*
*(d) Dump faster*
*(e) Raise the implement*
*(f) Roll back*

**IMPORTANT: Avoid damage.**

- Prevent damage or contamination to the female quick couplers. ALWAYS leave the color-coded hose ends connected to the couplers when the couplers are not in use.

**NOTE:**

- When the implement control lever is released, it returns to its neutral position.

## ■ Implement Lock Lever (Option)

When fixing the implement control lever at its neutral position, use the implement lock lever.

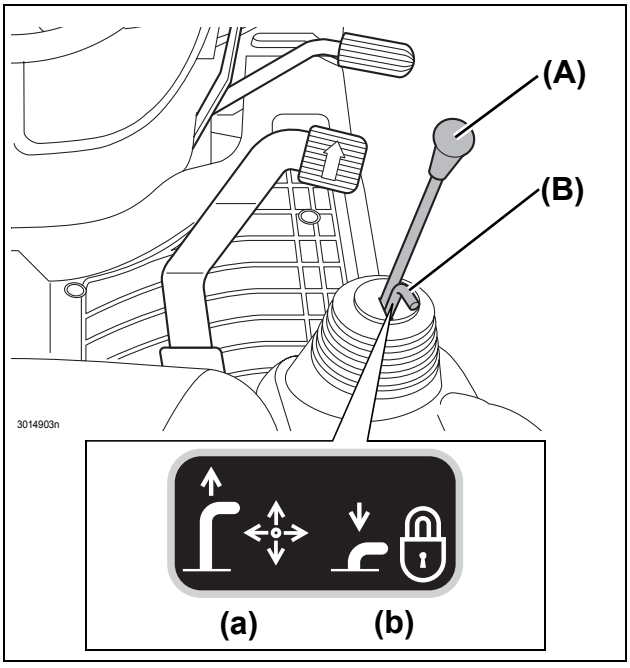


***(A) Implement control lever***
***(B) Implement lock lever***

**IMPORTANT: Avoid damage.**

- Do not attempt to operate the implement control lever when the implement control lever has been locked.
- When the implement control lever has been locked with the implement lock lever, move the implement control lever with light force to ensure that it has been securely locked.

*(a) For unlocking the implement control lever: Pull up the implement control lever.*
*(b) For locking the implement control lever: Push down the implement lock lever when the implement control lever is in its neutral position.*

## ■ Connecting the Implement Hydraulic Hoses

**⚠DANGER**

- **Before all the hydraulic system pressure has been fully relieved, do not attempt to connect the hoses to the tractor implement control valve couplers.**

1. Park the tractor safely and securely.
2. Fully relieve hydraulic pressure be moving the implement control lever forward and backward and right and left several times.
3. For the correct procedure to connect the hydraulic hoses to the couplers, refer to the implement instruction manual.

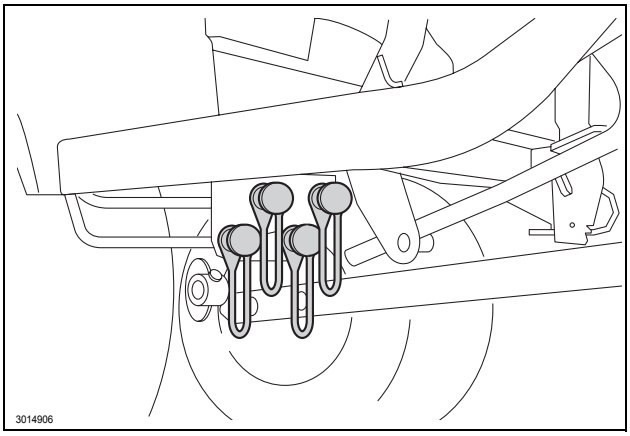

# 12. TIRES, WHEELS AND BALLAST

**⚠WARNING**

Mounting the tire is dangerous work. Qualified professional personnel should mount the tire on the rim using proper equipment.

---

ALWAYS keep the tires inflated to the correct pressure. NEVER exceed the recommended inflation pressure specified in this *Operator's Manual*.

When servicing or replacing the tire(s), ALWAYS keep the tractor securely supported.

---

ALWAYS keep the wheel bolts tightening torque to the specified torque.

## 1. Tires

**⚠WARNING**

**Avoid injury:**

- **Mounting the tire is dangerous work. Qualified professional personnel should mount the tire on the rim using proper equipment.**

**IMPORTANT:**

- Only use the tires approved by Cub Cadet Yanmar dealers.
- When intending to use tires whose size is different from that of the original tires, contact your local Cub Cadet Yanmar dealer for the information about front drive gear ratio.

## ■ Inflation Pressure

**⚠WARNING**

- **ALWAYS keep the tires inflated to the correct pressure. NEVER exceed the recommended inflation pressure specified in this *Operator's Manual*.**

Inflation pressure gradually reduces as time elapses. Check the pressure of each tire before starting the day's operation and inflate the tires as necessary to the recommended pressures. If the tire pressures significantly decrease though the tires are correctly inflated every day, immediately request your local Cub Cadet Yanmar dealer to inspect or replace the problem tire(s).
Before loader work, make sure to check the tire pressure and, if necessary, inflate the tire(s) to the recommended pressure.
For the appropriate inflation pressure, refer to the following table:

| | Tire size | Inflation pressure (psi(kgf/cm$^2$)) | Inflation pressure when an implement such as the front loader has been attached to the front of the machine (psi(kgf/cm$^2$)) |
|---|---|---|---|
| Front | 18 × 8.50 - 10 | 20 (1.4) | 22 (1.5) |
| Rear | 26 × 12.00 - 12 | 20 (1.4) | 22 (1.5) |

## ■ Wheel Bolt Tightening Torque

**⚠WARNING**

**Avoid injury:**

- **ALWAYS keep the wheel bolts tightening to the specified torque.**
- **With the wheel bolts loosened, do not drive the tractor.**

Before starting day's operation, check tightening torque of each of the tire wheel bolts and, if necessary, retighten to the specified torque. For the specified torque, refer to the following table:

| | |
|---|---|
| Front wheel bolt (ft•lb (N•m)) | 52 - 59 (70 - 80) |
| Rear wheel bolt (ft•lb (N•m)) | 52 - 59 (70 - 80) |

# 2. Ballast

## ■ Front Ballast

To mount the front ballast, the optional front weight hitch is required.
To improve stability and traction, add ballast indicated in the table below. (Front End Weights)
Heavy pulling and rear-mounted implements can cause the front wheels to lift. To cope with this situation, add ballast so that reliable steering control is maintained and tip-over of the tractor is prevented. Remove the ballast when no longer necessary.

**NOTE:**

- For information about the optional front weight hitch, contact your local Cub Cadet Yanmar dealer.

**Front End Weights (Option)**

The front end weights can be mounted to the optional front weight hitch. For the appropriate number of weights, see the table below.

| Implement Name | Number of Weight |
|---|---|
| 42" Rotary Tiller | 0 |
| 48" Box Scraper | 0 |
| 60" Rear Blade | 0 |
| 48" Grooming Mower | 4 |
| Post hole digger | 0 |

**NOTE:**

- One (1) weight = 44 lbs (20 kg)

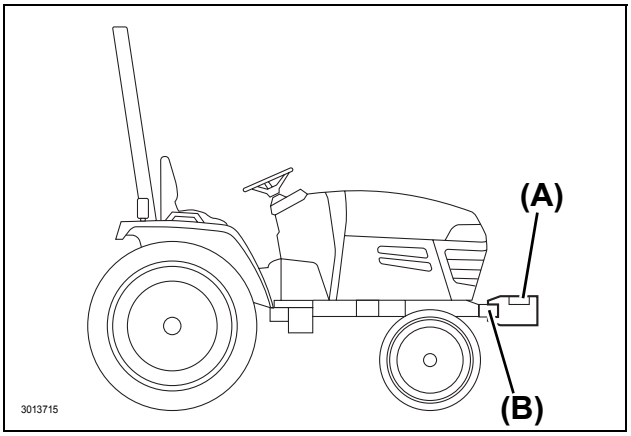


***(A) Front end weights (option)***
***(B) Front weight hitch (option)***

## ⚠WARNING

- **NEVER overload the tires.**
- **NEVER add weight in excess of the limits indicated below.**

## ■ Maximum Weight

**⚠WARNING**

- **NEVER overload the tires.**
- **NEVER add weight in excess of the limits indicated below.**

Four 44 lb (20 kg) weights can be added to the tractor.

## ■ Using Liquid Weight for the Tires

**⚠WARNING**

**Avoid injury:**

- **Installation of liquid ballast requires special implement and training. An exploding tire can lead to injury. Contact your local Cub Cadet Yanmar dealer or a tire service store to do this task.**
- **When using the front loader, always put liquid weight in the rear wheels. Failure to do so may result in overturning.**

**IMPORTANT: Avoid damage.**

- NEVER exceed the maximum load ratings indicated on the tires.
- ALWAYS cover rim completely with the liquid to prevent corrosion, but do not exceed 75%. A larger amount of the liquid causes a limited air space to be left in the tire, and which is too small to absorb shocks, possibly leading to damaged tire.

**NOTE:**

- We do not recommend that alcohol be used as the ballast. Calcium chloride solution is heavier and less expensive.
- A water solution of calcium chloride offers a safe, economical ballast, and will prevent freezing. If properly used, it will not damage tires, tubes or rims.
- A mixture of 3.5 lb of calcium chloride and approximately 1 US gal of water (0.4 kg/L) will not fully freeze at a temperature above –50°F (–45°C).
- Fill tubeless tires at least to the valve stem height (at least 75%). Smaller amount of the solution results in partly exposed rims, possibly leading to corrosion of the rim.

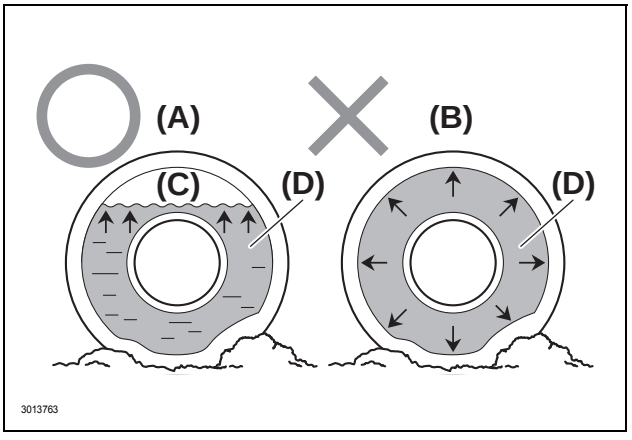


***(A) Correct: 75%-full The remaining air can be compressed like a cushion.***
***(B) Incorrect: 100%-full Water cannot be compressed.***
***(C) Air***
***(D) Water***

# 13. MAINTENANCE

●For the checkpoints (✔) listed below, check and service at the intervals indicated in the table.
●For the inspection and maintenance procedures, see 15 “PERIODIC SERVICE”.

## 1. Maintenance Check List

| No | Topic | | Time | Service Intervals | | | | | | | | | | | | | | | | | | | | | | | After Purchase | |
|---|---|---|---|---|---|---|---|---|---|---|---|---|---|---|---|---|---|---|---|---|---|---|---|---|---|---|---|---|
| | | | | Hours | | | | | | | | | | | | | | | | | | | | | | | | |
| | | | | Daily | 5 | 15 | 50 | 100 | 150 | 200 | 250 | 300 | 350 | 400 | 450 | 500 | 550 | 600 | 650 | 700 | 750 | 800 | 850 | 900 | 950 | 1000 | 1 year | 2 years |
| 1 | Refueling the fuel tank | | Daily | ✔ | | | | | | | | | | | | | | | | | | | | | | | | |
| 2 | Engine oil level | Check | Daily | ✔ | | | | | | | | | | | | | | | | | | | | | | | | |
| | Engine oil | Change | 50/100hr and Every 100hr | | | | ✔ | ✔ | | ✔ | | ✔ | | ✔ | | ✔ | | ✔ | | ✔ | | ✔ | | ✔ | | ✔ | | |
| 3 | Engine oil filter | Replace | 50/200hr and Every 200hr | | | | ✔ | | | ✔ | | | | ✔ | | | | ✔ | | | | ✔ | | | | ✔ | | |
| 4 | Transmission oil level | Check | Daily | ✔ | | | | | | | | | | | | | | | | | | | | | | | | |
| | Transmission oil | Change | 50/300hr and Every 300hr | | | | ✔ | | | | | ✔ | | | | | | ✔ | | | | | | ✔ | | | | |
| 5 | Transmission oil filter | Replace | 50/300hr and Every 300hr | | | | ✔ | | | | | ✔ | | | | | | ✔ | | | | | | ✔ | | | | |
| 6 | Front axle case oil level | Check | Every 50hr | | | | ✔ | ✔ | ✔ | ✔ | ✔ | ✔ | ✔ | ✔ | ✔ | ✔ | ✔ | ✔ | ✔ | ✔ | ✔ | ✔ | ✔ | ✔ | ✔ | ✔ | ✔ | | |
| | Front axle case oil | Change | Every 500hr | | | | | | | | | | | | | ✔ | | | | | | | | | | ✔ | | |
| 7 | Front axle pivot | Adjust | Daily | ✔ | | | | | | | | | | | | | | | | | | | | | | | | |
| 8 | Fuel / water separator | Check | Every 50hr | | | | ✔ | ✔ | ✔ | ✔ | ✔ | ✔ | ✔ | ✔ | ✔ | ✔ | ✔ | ✔ | ✔ | ✔ | ✔ | ✔ | ✔ | ✔ | ✔ | ✔ | ✔ | | |
| | | Clean | Every 100hr | | | | | ✔ | | ✔ | | ✔ | | ✔ | | | | ✔ | | ✔ | | ✔ | | ✔ | | ✔ | | |
| | | Replace | Every 500hr | | | | | | | | | | | | | ✔ | | | | | | | | | | ✔ | | |
| 9 | Fuel filter | Replace | Every 500hr | | | | | | | | | | | | | ✔ | | | | | | | | | | ✔ | | |
| 10 | Air cleaner element | Clean | Every 100hr | | | | | ✔ | | ✔ | | ✔ | | ✔ | | ✔ | | ✔ | | ✔ | | ✔ | | ✔ | | ✔ | | |
| | | Replace | Every 1 year | | | | | | | | | | | | | | | | | | | | | | | | ✔ | |
| 11 | Fan belt | Adjust | Every 50hr | | | | ✔ | ✔ | ✔ | ✔ | ✔ | ✔ | ✔ | ✔ | ✔ | ✔ | ✔ | ✔ | ✔ | ✔ | ✔ | ✔ | ✔ | ✔ | ✔ | ✔ | | |
| 12 | Radiator hose and clamp | Check | Daily | ✔ | | | | | | | | | | | | | | | | | | | | | | | | |
| | | Replace | Every 2 years | | | | | | | | | | | | | | | | | | | | | | | | | ✔ |
| 13 | Radiator cooling fins / screen | Clean | Daily | ✔ | | | | | | | | | | | | | | | | | | | | | | | | |
| 14 | Front grille screen | Clean | Daily | ✔ | | | | | | | | | | | | | | | | | | | | | | | | |
| 15 | Cooling system | Check | Daily | ✔ | | | | | | | | | | | | | | | | | | | | | | | | |
| | | Flush | Every 1000hr or a year | | | | | | | | | | | | | | | | | | | | | | | ✔ | ✔ | |
| 16 | Coolant | Change | Every 1000hr or a year | | | | | | | | | | | | | | | | | | | | | | | ✔ | ✔ | |
| 17 | Fuel line | Check | Daily | ✔ | | | | | | | | | | | | | | | | | | | | | | | | |
| | | Replace | Every 2 years | | | | | | | | | | | | | | | | | | | | | | | | | ✔ |
| 18 | Intake air hose | Check | Daily | ✔ | | | | | | | | | | | | | | | | | | | | | | | | |
| | | Replace | Every 2 years | | | | | | | | | | | | | | | | | | | | | | | | | ✔ |
| 19 | Safety interlock system | Check | Daily | ✔ | | | | | | | | | | | | | | | | | | | | | | | | |
| 20 | Greasing and lubricating | | Every 50hr | | | | ✔ | ✔ | ✔ | ✔ | ✔ | ✔ | ✔ | ✔ | ✔ | ✔ | ✔ | ✔ | ✔ | ✔ | ✔ | ✔ | ✔ | ✔ | ✔ | ✔ | | |
| 21 | Brake | Check | Daily | ✔ | | | | | | | | | | | | | | | | | | | | | | | | |

| No | Topic | | Time | Service Intervals | | | | | | | | | | | | | | | | | | | | | | | | After Purchase | |
|---|---|---|---|---|---|---|---|---|---|---|---|---|---|---|---|---|---|---|---|---|---|---|---|---|---|---|---|---|---|
| | | | | Daily | Hours | | | | | | | | | | | | | | | | | | | | | | | 1 year | 2 years |
| | | | | | 5 | 15 | 50 | 100 | 150 | 200 | 250 | 300 | 350 | 400 | 450 | 500 | 550 | 600 | 650 | 700 | 750 | 800 | 850 | 900 | 950 | 1000 | | |
| 22 | Seat belt & Roll-Over Protective Structure (ROPS) | Check | Daily | ✔ | | | | | | | | | | | | | | | | | | | | | | | | |
| 23 | Wheel bolt torque | Check | Daily | ✔ | ✔ | ✔ | ✔ | ✔ | ✔ | ✔ | ✔ | ✔ | ✔ | ✔ | ✔ | ✔ | ✔ | ✔ | ✔ | ✔ | ✔ | ✔ | ✔ | ✔ | ✔ | ✔ | ✔ | | |
| 24 | Inflation pressure | Check | Daily | ✔ | | | | | | | | | | | | | | | | | | | | | | | | | |
| 25 | Toe-in | Adjust | Every 200hr | | | | | | | ✔ | | | | ✔ | | | | ✔ | | | | ✔ | | | | ✔ | | | |
| 26 | Engine valve clearance | Adjust | Every 1000hr | | | | | | | | | | | | | | | | | | | | | | | ✔ | | | |
| 27 | Fuel injection nozzle injection pressure | Check | Every 1000hr | | | | | | | | | | | | | | | | | | | | | | | ✔ | | | |
| 28 | Fuel injection pump | Check | Every 1000hr | | | | | | | | | | | | | | | | | | | | | | | ✔ | | | |
| 29 | Light bulb | Check | Daily | ✔ | | | | | | | | | | | | | | | | | | | | | | | | | |
| 30 | Hydraulic hose | Check | Daily | ✔ | | | | | | | | | | | | | | | | | | | | | | | | | |
| | | Replace | Every 2 years | | | | | | | | | | | | | | | | | | | | | | | | | | ✔ |

For assistance in periodic maintenance procedures, contact your local Cub Cadet Yanmar dealer.

## 2. Lubricants

| No. | Locations | Capacities | Lubricants | |
|---|---|---|---|---|
| 1 | Fuel | Approximately 5.8 US gal (22 L) | No.2-D diesel fuel<br>No.1-D diesel fuel if temperature is below 14°F (–10°C) | |
| 2 | Coolant | Approximately 3.4 US qt (3.2 L) | High Quality Permanent Type Antifreeze (Ethylene Glycol with corrosion and rust inhibitor chemicals)<br>Coolant Mixture Ratio<br>Distilled Water 50% : Antifreeze 50% | |
| 3 | Engine crankcase (with filter) | Approximately 2.5 US qt (2.4 L) | API Service Classifications CF or higher<br>SAE 10W-30 or SAE 10W-40 | |
| 4 | Transmission case | Approximately 2.0 US gal (7.5 L) | Cub Cadet Hydraulic / Transmission Fluid | |
| 5 | Front axle case | Approximately 2.6 US qt (2.5 L) | Cub Cadet GEAR LUBE<br>or SAE 80W-90 gear oil | |
| 6 | Greasing | No. of greasing points | Capacity | Type of grease |
| | Drive pedal | 1 | Until grease overflows | Cub Cadet 251H EP Grease or General all purpose grease NLGI grade No.2 |
| | | | | |
| | | | | |
| | | | | |
| | | | | |
| | | | | |

(Specifications and design are subject to change without prior notice for improvement.)

# 3. Replacement Parts

## 1. Technical Document

**[U.S.A. and Canada]**
If you want to obtain a copy of Parts Catalog or Technical Manual for your tractor, contact your local Cub Cadet Yanmar dealer.

## 2. Parts

We recommend the use of the Cub Cadet Yanmar authentic parts and lubricants that are available from your local Cub Cadet Yanmar dealer.

When ordering a part, tell your local dealer the machine serial number and engine serial number for your tractor. These numbers are those you previously entered in the “2. SERVICING THE TRACTOR” of this manual.

# 14. PERIODIC SERVICE

**⚠WARNING**



NEVER smoke around the battery or during refueling. Keep sparks or open flames away from the battery and fuel tank. The battery emits hydrogen and oxygen during recharging and can pose a serious hazard.

---

NEVER work under any hydraulically supported devices. Such devices can settle, suddenly leak or be accidentally lowered. ALWAYS support the tractor securely with rugged stands or other appropriate means.

ALWAYS allow the tractor to fully cool down before accessing the engine, muffler, radiator or other hot components.

---

ALWAYS park your tractor on a solid, level ground, engage the parking brake securely, turn off the Power Take Off (PTO) switch, lower the implement to the ground, set the forward and reverse drive pedal to the neutral position, stop the engine and remove the key from the starter key switch before starting any service work.

## ■ Warranty and Repair of the Engine

A maintenance, inspection, repair or replacement service of engine emission control devices and systems may be performed at the owner's expense by any qualified off-road engine repair shop or mechanic. Warranty repairs must be executed by an authorized Cub Cadet Yanmar dealer.

**⚠WARNING**

**Avoid personal injury:**

- **Engine emission gas contains carbon monoxide that, if inhaled, can cause severe poisoning or even death.**
- **NEVER run the engine in a poorly ventilated, enclosed indoor space.**
- **To release the engine emission gas to an outdoor area, connect an extension pipe to the engine exhaust pipe.**
- **Allow fresh outside air to flow into the work space to remove the engine emission gas from that space.**

**NEVER inhale the emission gas.**



# 1. Opening / Closing the Hood

## ⚠WARNING

- **Do not open the hood while the engine is running.**
- **Do not touch the hot muffler or exhaust pipe.**

## ■ Opening the Hood

1. Turn the hood open / close knob clockwise while slightly pushing the upper portion of the hood. The hood lock will be released.

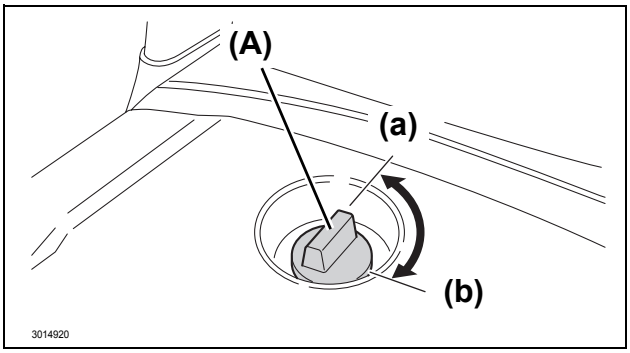


***(A) Hood open / close knob***
*(a) Close*
*(b) Open*

2. Lift up the hood with both hands and tilt it forward.

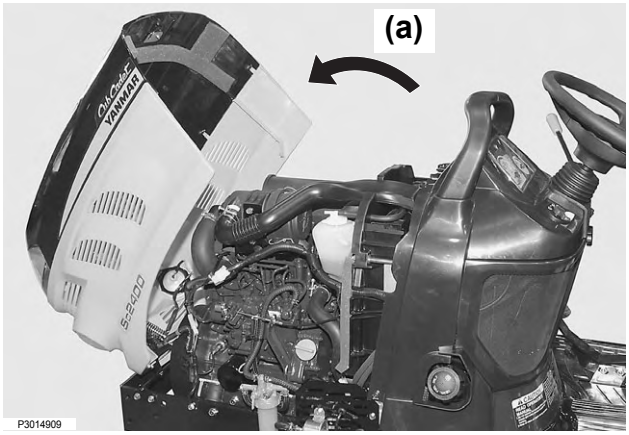


*(a) Tilt the hood forward*

## ■ Closing the Hood

1. Lift up the hood with both hands and tilt it toward the engine side.
2. Lock the hood open / close knob by turning it counterclockwise while slightly pushing the upper portion of the hood.

## ⚠CAUTION

- **When closing the hood, avoid pinching fingers with the hood.**

## *NOTICE*

- Periodically clean around the hood open/close knob. Accumulation of soil or dust can cause the knob to be turned with difficulty.

# 2. Daily Checks

## ■ Refilling the Fuel Tank

**IMPORTANT: Avoid damage.**

- NEVER use a galvanized container to store fuel. Diesel fuel in a galvanized container reacts with the zinc coating in the container to generate zinc flakes. If the fuel contains water, a zinc gel will also occur. The zinc gel and flakes will quickly clog the fuel filter and damage the fuel injection nozzle and fuel pump.

Diesel fuel should comply with the following specifications.

In cold climate, use Grade No. 1-D diesel fuel, and in warm climate, use Grade No. 2-D diesel fuel. The cetane number of the diesel fuel used must be 45 or higher.
When the air temperature drops below –4°F(–20°C) or the altitude of the work site exceeds 5000 ft (1500 m), use a diesel fuel whose cetane value is 50 or higher.

The sulfur content must not exceed 0.5 % by volume. Less than 0.05 % is preferred.

**Bio-diesel Fuels**
In the United States, non-mineral oil based fuel resources such as RME (Rapeseed Methyl Ester) and SOME (Soybean Methyl Ester), collectively known as FAME (Fatty Acid Methyl Esters), are being used as extenders for mineral oil derived diesel fuels.
Cub Cadet Yanmer approves the use of bio-diesel fuels that do not exceed a blend of 5 % (by volume) of FAME with 95 % (by volume) of approved mineral oil derived diesel fuel. Such bio-diesel fuels are known in the market place as B5 diesel fuels.

## ⚠WARNING

**Avoid personal injury. Remember that fuel vapor is explosive and flammable:**

- **Stop the engine before refilling the fuel tank.**
- **NEVER smoke while handling fuel.**
- **Keep the fuel away from an open flame or sparks.**
- **Refuel outdoors or in a well-ventilated area.**
- **Wipe away spilled fuel immediately.**
- **To prevent static electric discharge, use a clean approved non-metal fuel container.**
- **To prevent static electric discharge, use a clean approved plastic funnel that has no metallic screen mesh or filter.**

**IMPORTANT: Be careful to avoid damage.**

- Dirt and water in the fuel can damage the engine.
- Remove dirt and debris from the fuel tank opening.
- Use clean, fresh, stabilized fuel.
- At the end of operation for the day, fill the fuel tank to prevent condensation from occurring in the fuel tank.
- When filling the fuel tank or container use a non-metallic funnel that has a plastic mesh strainer.

1. Park the tractor safely and securely.
2. Allow the engine to cool off for several minutes before refueling.
3. Remove the fuel tank cap.
4. Fill the tank with fresh fuel to the bottom of filler neck.

**IMPORTANT:**

- NEVER overfill the fuel tank.

5. Replace the fuel tank cap.

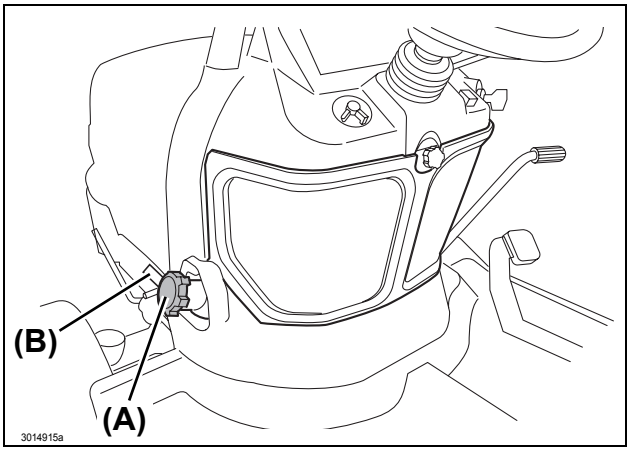


***(A) Fuel tank cap***
***(B) EPA regulation label CY114110-07760***




**EPA REGULATION**

USE LOW SULFER FUEL OR ULTRA LOW SULFER FUEL ONLY

## ■ Checking the Engine Oil Level

**IMPORTANT: Avoid damage.**

- ALWAYS check the oil level before day's operation. If the oil level is low, a serious engine problem can occur.
- ALWAYS check the oil level before operation.
- ALWAYS check the oil level when the engine is cold and not running.
- ALWAYS maintain the oil level between the lower and the upper marks.
- ALWAYS shut the engine down and allow to cool before adding the engine oil.

1. Park the tractor safely and securely.
2. Open the hood.

**IMPORTANT: Avoid damage.**

- Prevent dirt and other contaminants from entering the engine. Clean the area around the dipstick before removing it.

3. Remove the dipstick. Clean the dipstick blade with a clean paper towel or shop rag.
4. Insert the dipstick completely.
5. Remove the dipstick again.
6. Check the oil level on the dipstick. The oil level should be kept between the lower and the upper marks on the dipstick.
7. If the oil level is low:
   (1) Remove the oil fill cap.
   (2) Refill the specified oil until the oil level reaches between the lower and upper marks.

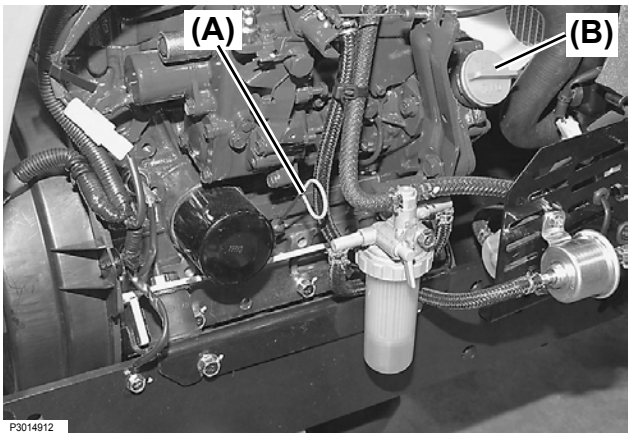


***(A) Dipstick***
***(B) Oil fill cap***
*(a) Upper mark*
*(b) Lower mark*

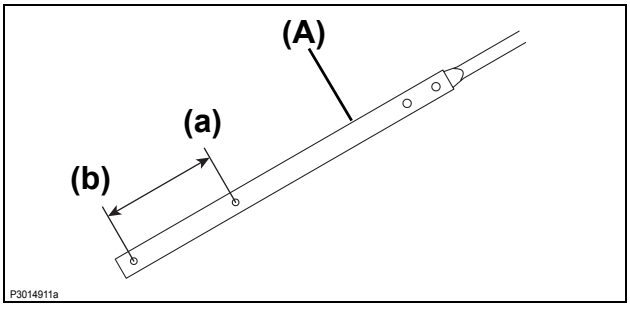


**NOTE:**

- NEVER overfill the engine with oil.

8. If the oil level exceeds the upper mark, drain the oil to a proper level.
9. Replace the dipstick.
10. Close the hood.

## ■ Checking the Transmission Oil Level

**IMPORTANT: Avoid damage.**

- ALWAYS check the oil level before day's operation. If the oil level is low, a serious transmission problem can occur.
- ALWAYS check the oil level before operation.
- ALWAYS check the oil level when the engine is cold and not running.
- ALWAYS maintain the oil level between the high and low marks.
- ALWAYS shut the engine down and allow to cool before adding the transmission oil.

1. Park the tractor safely and securely. Allow the tractor to cool off for at least 1 hour.
2. Tilt the seat forward.

**IMPORTANT: Avoid damage.**

- Prevent dirt and other contaminants from entering the transmission. Clean the area around the dipstick before removing it.

3. Remove the dipstick.
4. Thoroughly wipe the dipstick clean with a rag. Only insert the dipstick into the hole. At this point, do not fasten the dipstick into the hole.

**NOTE:**

- The dipstick is integrated with the oil fill cap.

5. Check the oil level on the dipstick. The oil level should be between the high and low marks on the dipstick.
6. If the oil level is low:
   Clean the area around the oil fill cap, then remove the fill cap from the transmission housing.
   Add Cub Cadet Hydraulic / Transmission Fluid through the fill port until the oil level is appropriate.

**NOTE:**

- NEVER overfill.

7. Replace and tighten the dipstick.

***(A) Oil fill cap***
***(B) Dipstick***
*(a) High mark*
*(b) Low mark*

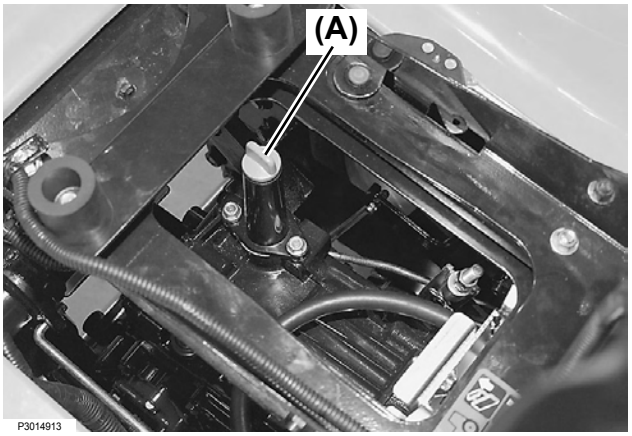


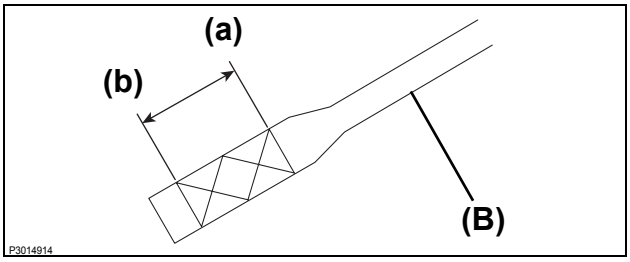


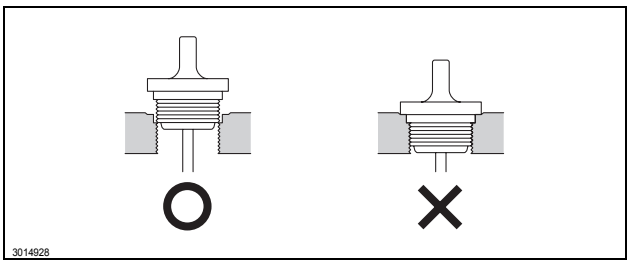

## ■ Checking the Radiator Hoses and Clamps

**⚠WARNING**

- **ALWAYS stop the engine, allow it to cool and remove the key from the starter key switch before checking the radiator hoses and clamps.**

1. Park the tractor safely and securely.
2. Open the hood.

**NOTE:**

- Visually check the hoses for cracks and wear. Squeeze the hoses to check for evidences of deterioration. Hoses should not be hard and brittle nor soft or swollen.

3. Check the upper radiator hose for any damage including cracking. Replace the damaged hose.
4. Check the hose clamps as necessary.
5. Check the lower radiator hose for any damage including cracking. Replace the damaged hose.
6. Check the hose clamps as necessary.
7. Close the hood.

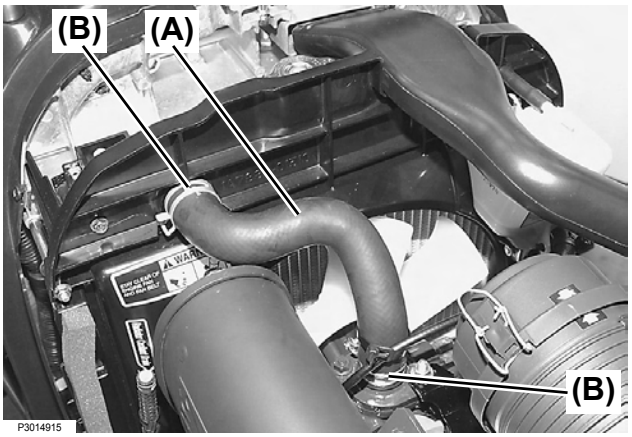


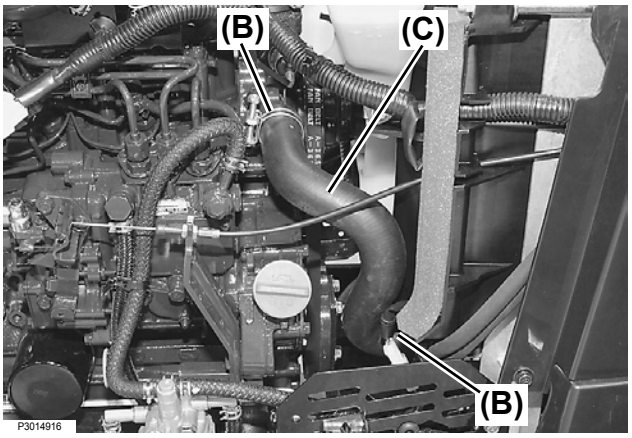


***(A) Upper radiator hose***
***(B) Hose clamps***
***(C) Lower radiator hose***

## ■ Cleaning the Radiator Cooling Fins and Screen

**⚠CAUTION**

- **ALWAYS stop the engine and remove the key from the starter key switch before cleaning the radiator cooling fins and screen.**

**⚠CAUTION**

**Avoid injury. Compressed air can cause debris and dirt to powerfully fly a long distance:**

- **NEVER allow bystanders near the tractor.**
- **When using compressed air for cleaning, ALWAYS ensure adequate air inflow to prevent engine overheating, or wear protective goggles.**
- **Reduce compressed air pressure to 30 psi (210 kPa).**

**IMPORTANT: Avoid damage.**

- The cooling fins, screen must remain clean in order to ensure adequate air inflow to prevent engine overheating.

1. Park the tractor safely and securely.
2. Allow the engine to cool completely.
3. Open the hood.
4. Lift up the intake air hose and then move it sideway. Then, raise the radiator cooling screen and remove it.
5. Clean the screen with compressed air, brush or cloth.
6. Remove any dirt and debris from the fins at the front and rear of the radiator and from the fan with compressed air.

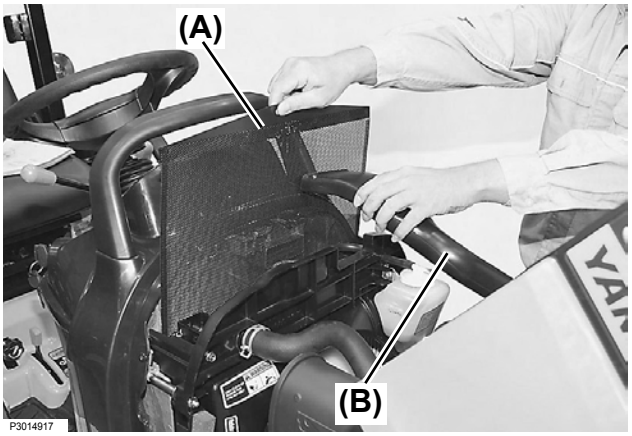


**IMPORTANT: Avoid damage.**

- When using compressed air, be careful not to damage the cooling fins.

7. Reinstall the radiator cooling screen.
8. Close the hood.

***(A) Radiator cooling screen***
***(B) Intake air hose***

## ■ Cleaning the Rear Grille Screen

**IMPORTANT: Avoid damage.**

- Clean the grille to prevent the engine from overheating and ensure adequate air inflow.

1. Check the grille for dirt, grass chippings and debris.
2. Clean the grille with a brush or cloth.

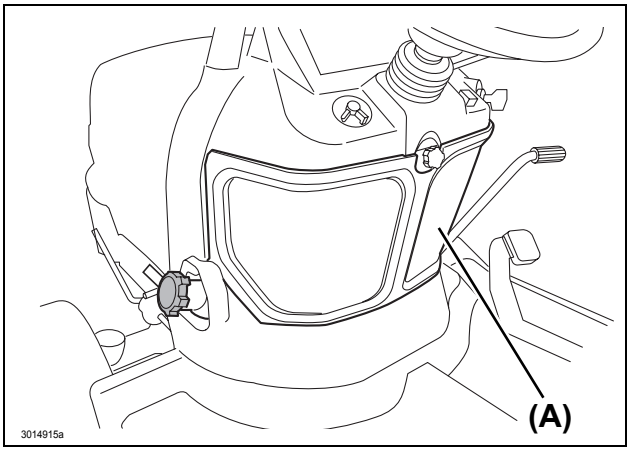


***(A) Rear grille screen***

## ■ Checking the Cooling System

**⚠WARNING**

**Avoid injury.**

- **ALWAYS allow radiator to cool before removing the radiator tank cap. The radiator will be hot and can cause burns. When the radiator tank cap is removed, pressure build-up in the cooling system can cause the coolant to spray out explosively.**
- **ALWAYS shut the engine down and allow it to cool.**
- **NEVER remove the radiator tank cap before the radiator and the engine are sufficiently cool such that they can be touched with bare hands.**
- **Loosen the radiator tank cap carefully to the first stop, allowing excessive pressure to escape. Only then remove the radiator tank cap. If the tractor is equipped with a coolant reserve tank, add coolant or water to the reserve tank, not to the radiator.**

1. Park the tractor safely and securely.
2. Allow the engine to cool down.
3. Open the hood.
4. Check that the coolant level of the reserve tank is between the FULL line and the LOW line.
5. When necessary, remove the reserve tank cap and add the coolant.
6. Add pre-diluted coolant which is a 50:50 antifreeze-water mixture.
   Use High Quality Permanent Type Antifreeze (Ethylene Glycol with corrosion and rust inhibitor chemicals).
7. Reinstall the reserve tank cap.
8. Close the hood.

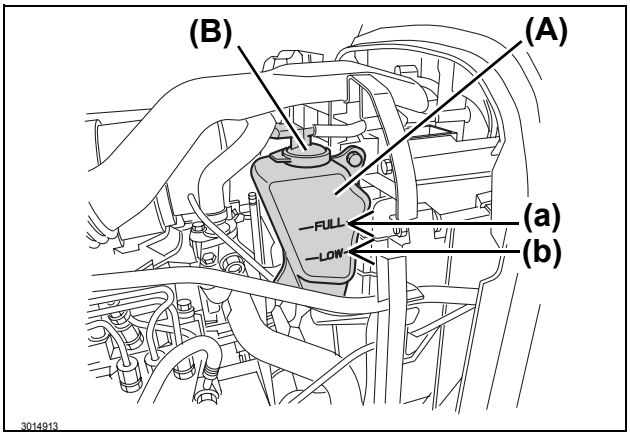


***(A) Reserve tank***
***(B) Reserve tank cap***
*(a) FULL line*
*(b) LOW line*

## ■ Checking the Fuel Line

Open the hood and then check:
- ●The rubber hose for oil leakage
- ●The rubber hose for any damage

***(A) Fuel line***

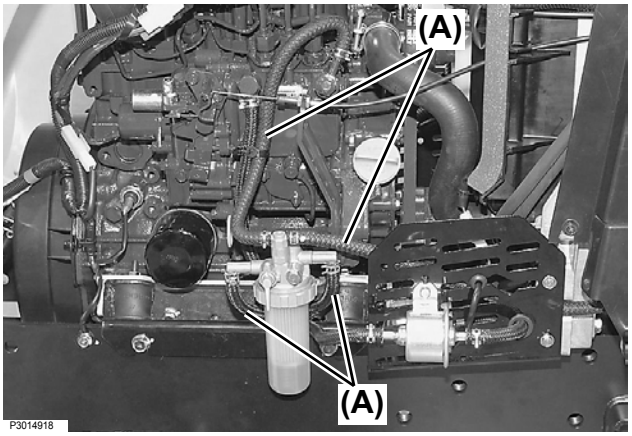


## ■ Checking the Intake Air Hoses and Clamps

1. Park the tractor safely and securely.
2. Open the hood.
3. Ensure that the hose and the hose clamps are in good condition.
4. Check the hose clamps for looseness.
5. Close the hood.

***(A) Intake air hose***
***(B) Hose clamps***

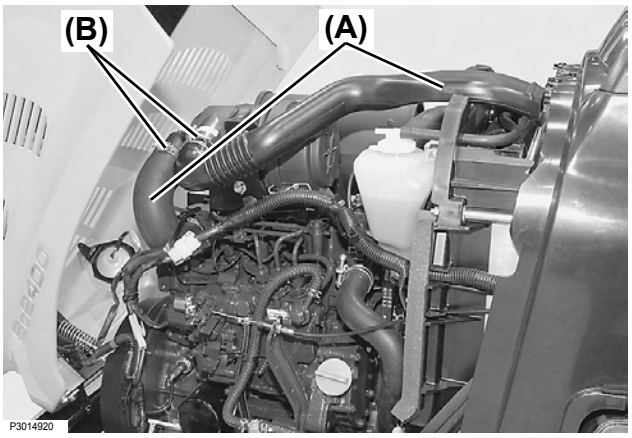

## ■ Checking the Safety Interlock System

**⚠ CAUTION**

**To avoid personal injury, do as follows:**

- **Read the "Safety Precautions" at the head of this manual.**
- **Read the danger, warning and caution statements on the safety-alert symbols on the tractor.**
- **To avoid possible poisoning from exhaust fumes, NEVER operate the engine in an enclosed place that lacks adequate ventilation.**
- **NEVER start the engine while standing on the ground. ALWAYS start the engine from the operator's seat.**
- **Before starting the engine, ALWAYS set the forward and reverse drive pedal to the "NEUTRAL" position and the Power Take Off (PTO) switch to the "OFF" position.**

Check the following points to be sure that the machine is in the normal state and ready to start.
If a fault is detected on the machine, do not operate the machine and contact your local Cub Cadet Yanmar dealer for technical assistance.

Before checking the safety interlock system, perform the following procedure.

1. Sit on the operator's seat.
2. Park the tractor safely on a solid, flat, level ground.
3. Engage the parking brake securely.
4. Turn off the Power Take Off (PTO) switch.
5. Set the forward and reverse drive pedal to the NEUTRAL position.
6. Stop the engine.

### 1. Power Take Off (PTO) Safety Switch

1. Pull up the Power Take Off (PTO) switch to set it to the ON position.
2. Turn the key to the START position.
3. Make sure that the starter motor does not crank.
4. Turn the key to the OFF position.
5. Push in the Power Take Off (PTO) switch to set it to the OFF position.
6. Turn the key to the START position.
7. Make sure that the starter motor starts running.

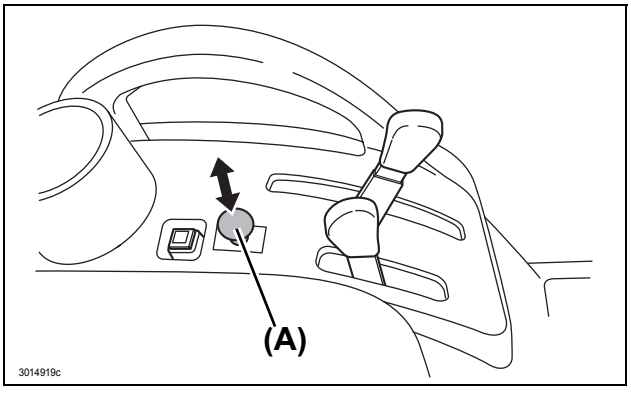


***(A) Power Take Off (PTO) switch***

## 2. Parking Brake Safety Switch

1. Disengage the parking brake.
2. Turn the key to the START position.
3. Make sure that the starter motor does not crank.
4. Turn the key to the OFF position.
5. Engage the parking brake securely.
6. Turn the key to the START position.
7. Make sure that the starter motor starts running.

## 3. Drive Pedal Safety Switch

1. Turn the key to the START position to run the engine.
2. Pull up the Power Take Off (PTO) switch to set it to the ON position.
3. Disengage the parking brake.
4. Slowly step on the reverse side of the forward and reverse drive pedal.
5. Make sure that the PTO is not running.

## 4. Drive Pedal and Seat Safety Switch

1. Turn the key to the START position to run the engine.
2. Make sure that the Power Take Off (PTO) switch is in the OFF position.
3. Raise up slightly off the seat (Do not get off the machine).
4. Slowly step on the drive pedal.
5. Make sure that the engine stops after around one second.

## 5. Seat Safety Switch

1. Turn the key to the START position to run the engine.
2. Pull up the Power Take Off (PTO) switch to set it to the ON position.
3. Raise up slightly off the seat (Do not get off the machine).
4. Make sure that the engine stops after around one second.

## ■ Checking and Adjusting the Brake

**⚠ CAUTION**

- **Before checking the brake pedal, park the tractor safely on solid, level ground, stop the engine and remove the key from the starter key switch.**

1. Disengage the parking brake.
2. Turn the seat forward.
3. Loosen the lock nut.
4. Adjust the play of the brake to 0.8 to 1.2 in. (20 to 30 mm) by tightening or loosening the adjusting nut.
5. Retighten the lock nut.

***(A) Lock nut***
***(B) Adjusting nut***
*(a) 0.8 to 1.2 in. (20 to 30 mm)*

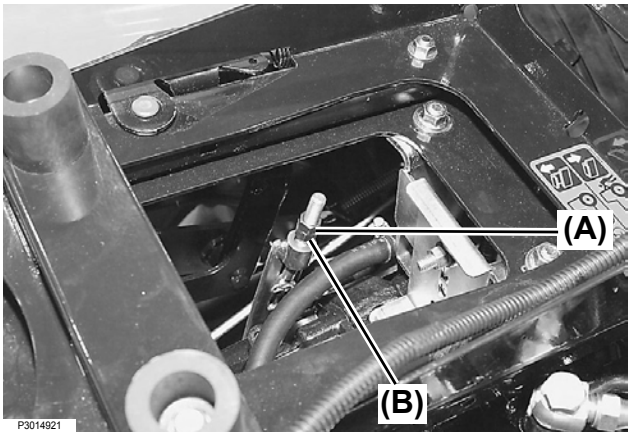


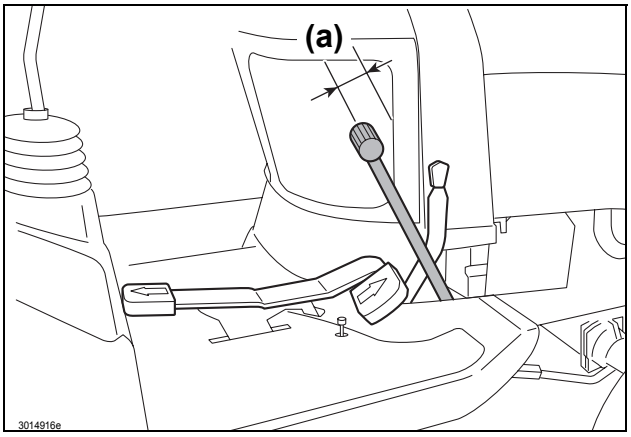


## ■ Checking the Seat Belt and Roll-Over Protective Structure (ROPS)

1. Before operating the tractor, always make sure that the seat belt and Roll-Over Protective Structure (ROPS) mounting hardware are in correct working order.
2. Replace any damaged hardware.

## ■ Checking the Wheel Bolt Tightening Torque

**⚠WARNING**

**Avoid injury:**

- **To prevent possible roll-over of the tractor, check the rim, hub and wheel bolts before starting day's operation.**

Before starting day's operation, check tightening torque of each of the tire wheel bolts and, if necessary, retighten to the specified torque.
Check the tightening torque after the first 5, 15 and 50 hours and thereafter every 50 hours of operation. If necessary, retighten to the specified torque.
For the specified torque, refer to the following table.

| | |
|---|---|
| Front wheel bolt (ft•lb (N•m)) | 52 - 59 (70 - 80) |
| Rear wheel bolt (ft•lb (N•m)) | 52 - 59 (70 - 80) |

## ■ Checking the Inflation Pressure

**⚠WARNING**

- **ALWAYS keep the tires inflated to the correct pressure. NEVER exceed the recommended inflation pressure specified in this *Operator's Manual.***

Adjust the front and rear tires to the standard pressure. Check the tires for fissures and any other damages. Before loader work, make sure to check the tire pressure and, if necessary, inflate the tire(s) to the recommended pressure.

*(a) Too high*
*(b) Standard*
*(c) Too low*

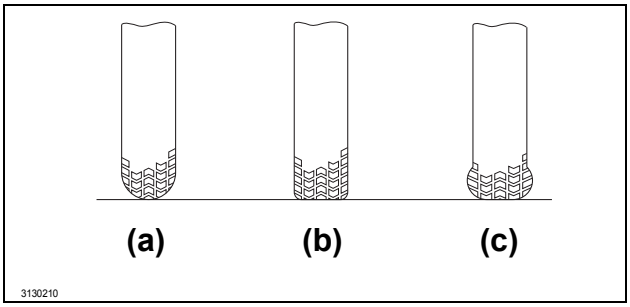


**Inflation pressures**

| | Tire size | Inflation pressure (psi(kgf/cm$^2$)) | Inflation pressure when an implement such as the front loader has been attached to the front of the machine (psi(kgf/cm$^2$)) |
|---|---|---|---|
| Front | 18 × 8.50 - 10 | 20 (1.4) | 22 (1.5) |
| Rear | 26 × 12.00 - 12 | 20 (1.4) | 22 (1.5) |

## ■ Checking the Light Bulbs

1. Inspect the lights for blown bulbs and damaged lenses.
2. Replace a broken bulb or lens.

## ■ Checking the Tie-rod Rubber Boots

Check the tie-rod rubber boots for any break.
If any break is found, contact your local Cub Cadet Yanmar dealer for technical assistance.

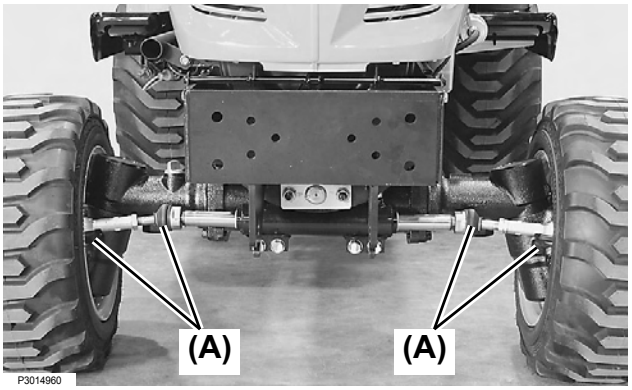


***(A) Tie-rod rubber boots***

## ■ Checking the Hydraulic Hoses

**⚠WARNING**

**Avoid injury:**

- **When checking for oil leakage, use a sheet(s) of paper, etc.**
- **ALWAYS wear protective goggles and gloves.**

Check the conditions of the hydraulic hoses.
Check for oil leakage. If any, tighten the bolts to the appropriate torque as described below.

### 1. Power Steering Hoses

| | |
|---|---|
| (a) 9/16-18UNF | 25 - 28 N•m<br>(18.4 - 20.7 ft•lbs) |
| (b) 9/16-18UNF | 35.3 - 43.1 N•m<br>(26.0 - 31.8 ft•lbs) |

***(A) Power steering hose***

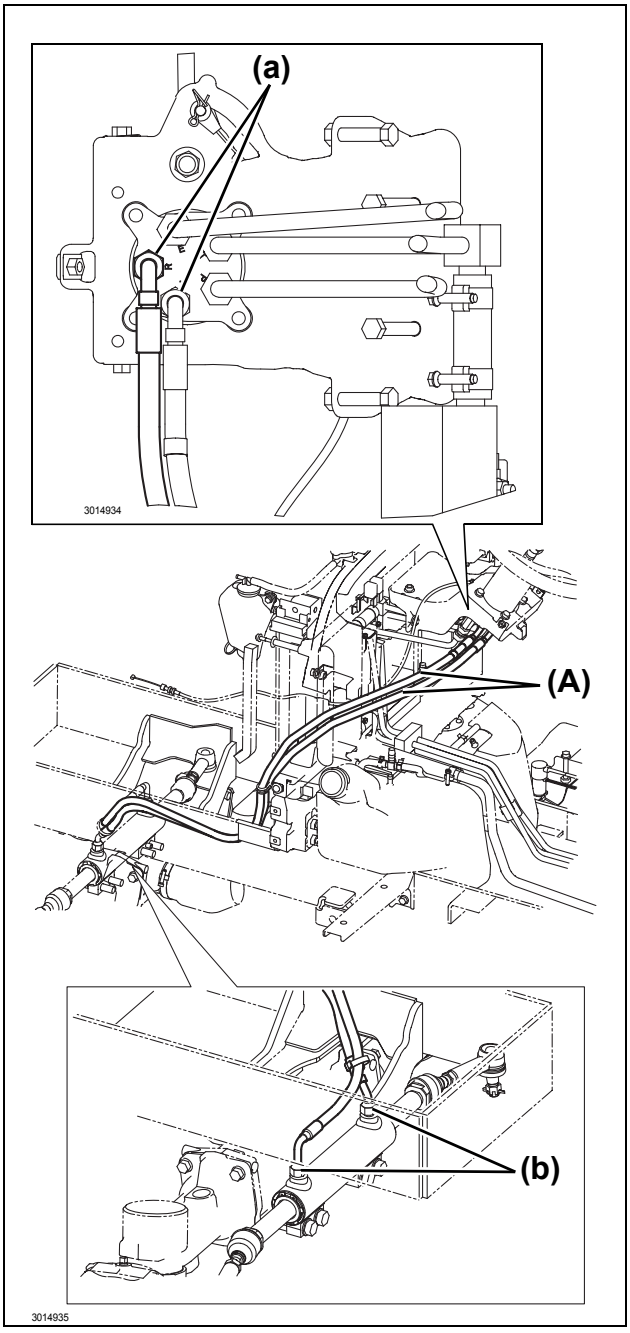

## 2. Implement Control Valve Hoses

| | |
|---|---|
| (a) 9/16UNF - 14.5 | 35.3 - 43.1 N•m<br>(26.0 - 31.8 ft•lbs) |
| (b) 9/16UNF - 14.5 | 39 - 49 N•m<br>(28.8 - 36.1 ft•lbs) |

***(A) Implement Control Valve hose***

**NOTE:**

- When changing the orientation of (c) is necessary for replacing the hose, it may be preferable to loosen the pipe fitting bolt. In such a case, replace the copper gasket.

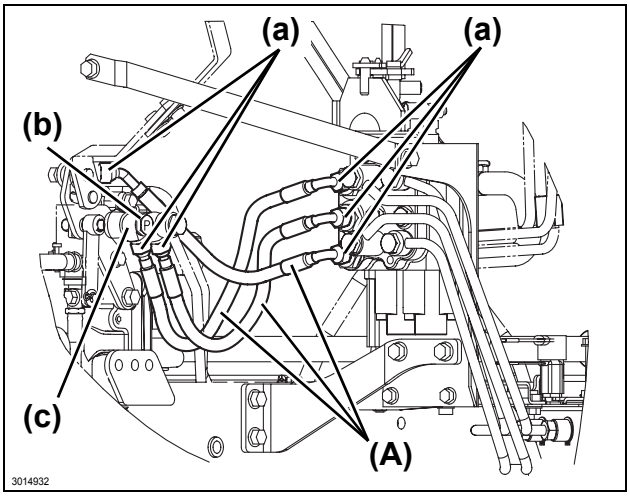


## 3. Lift Cylinder Hose and Drain Hose

| | |
|---|---|
| (a) G1/4 | 22.6 - 27.5 N•m<br>(16.7 - 20.3 ft•lbs) |
| (b) Connector PF1/4 | 1.5 - 2.5 N•m<br>(1.1 - 1.8 ft•lbs) |
| (c) G1/4 | 22.6 - 27.5 N•m<br>(16.7 - 20.3 ft•lbs) |

***(A) Lift cylinder hose***
***(B) Drain hose***

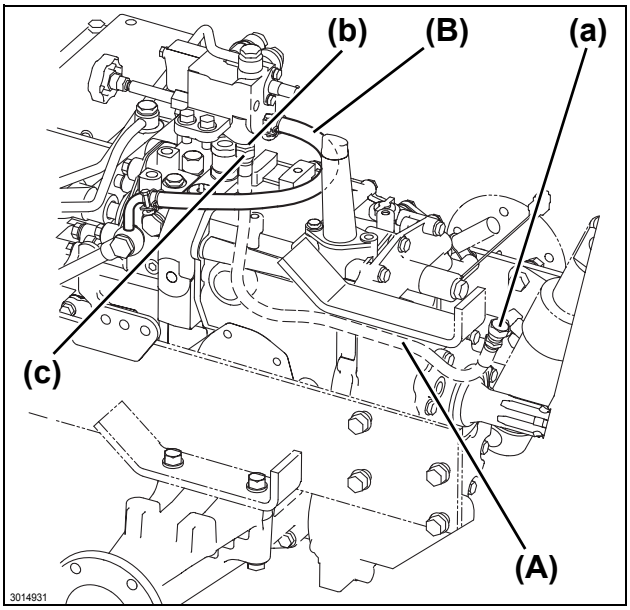


## 4. Oil Cooler Hoses

| | |
|---|---|
| (a) Clamp | 2.5 - 3.4 N•m<br>(1.8 - 2.5 ft•lbs) |

***(A) Oil cooler hose***

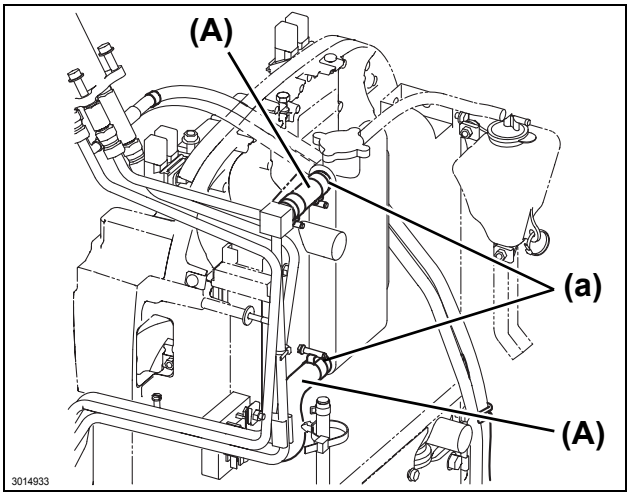

# 3. First 50 Hours

## ■ Changing the Engine Oil

For the maintenance work, see “Engine Oil” on page 14-23.

## ■ Replacing the Engine Oil Filter

For the maintenance work, see “Replacing the Engine Oil Filter” on page 14-27.

## ■ Changing the Transmission Oil

For the maintenance work, see “Changing the Transmission Oil and Replacing the Transmission Oil Filter” on page 14-29.

## ■ Replacing the Transmission Oil Filter

For the maintenance work, see “Changing the Transmission Oil and Replacing the Transmission Oil Filter” on page 14-29.

# 4. Every 50 Hours

## ■ Checking the Front Axle Oil Level

**IMPORTANT: Avoid damage.**

- Before checking the oil level, allow the oil to settle for 1 hour so that the current oil level can be accurately read on the dipstick. Recheck the oil level after operating the tractor for several hours.

1. Park the tractor safely and securely.
2. Allow the tractor to cool off for at least 1 hour and the oil to settle.

**IMPORTANT: Avoid damage.**

- Dirt and debris in the oil may damage the front axle. Clean the area around the dipstick before removing it.

3. Loosen and remove the dipstick situated on the right side of the front axle.
4. Wipe the dipstick clean with a rag. Only insert the dipstick into the hole on axle. At this point, do not fasten the dipstick into the axle case.
5. Remove the dipstick again. Read the oil level on the dipstick. The oil level should be between the high and low level marks on the dipstick.

**When the oil level is low:**

- Add Cub Cadet GEAR LUBE or SAE 80W-90 gear oil through the fill opening until the oil level is appropriate.
- Reinstall and tighten the dipstick.

6. Operate the tractor for several hours, and then check the front axle oil level again.

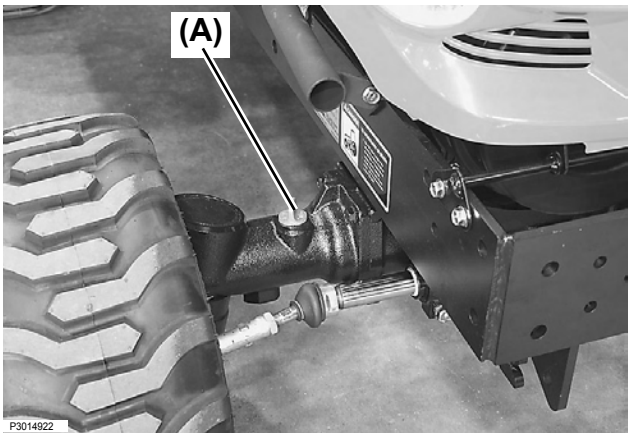


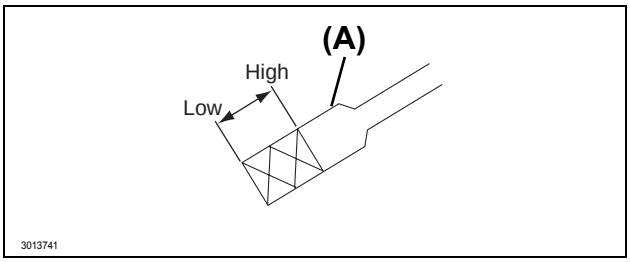


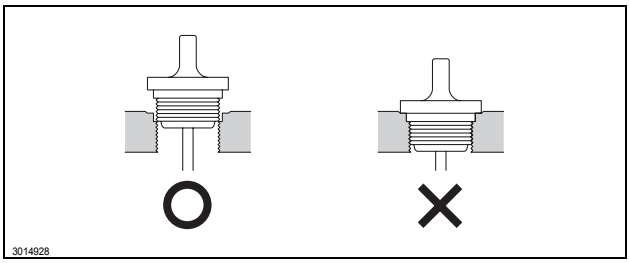


***(A) Dipstick***

## ■ Checking the Fuel / Water Separator

**⚠WARNING**

**Avoid injury:**

- **Remember that vapor from diesel fuel is explosive and flammable.**
- **NEVER smoke while handling the fuel.**
- **Keep the fuel away from open flames or sparks.**
- **Before servicing, stop the engine.**
- **Before servicing, allow the engine to cool off.**
- **Work in a well-ventilated area.**
- **Immediately wipe away spilled fuel.**

1. Park the tractor safely.
2. Open the hood.
3. Turn the valve lever to the "Close" position.
4. Turn the locking collar counterclockwise to unlock the sediment bowl, then pull the sediment bowl downward to remove from the separator body.
5. When water and/or sediment is/are found in the sediment bowl, discard it together with fuel in the sediment bowl and clean the sediment bowl with diesel oil.
6. Reinstall the sediment bowl, and turn the valve lever to the "ON" position.
7. Close the hood.
8. Turn the key to the START position to crank the engine to bleed the air from the fuel system.

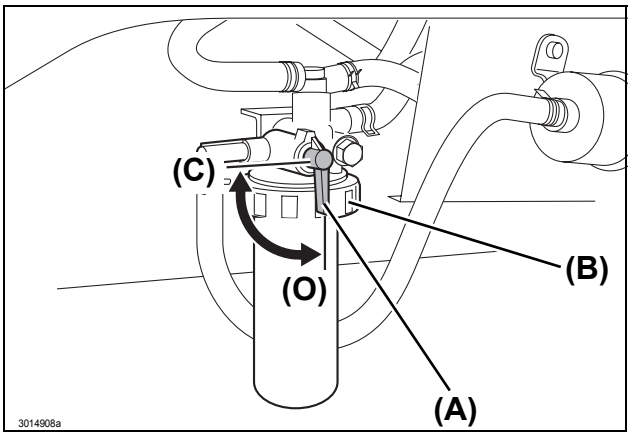


***(A) Valve lever***
***(B) Sediment bowl locking collar***
*(O) Open*
*(C) Close*

## ■ Adjusting the Fan Belt

**⚠WARNING**

**Be careful to avoid injury:**

- **Fingers or loose clothing can be entangled with rotating parts. Before servicing, stop the engine and allow all the moving parts to stop completely.**

### 1. Checking the Belt Tension

1. Park the tractor safely and securely.
2. Open the hood.
3. With a thumb, gently apply pressure to the midpoint of the belt between the pulleys. The belt should deflect inward by approximately 0.4 to 0.6 in. (10 to 15 mm).
4. If the deflection is not as specified, adjust the tension of the belt.

***(A) Midpoint of the belt***
***(B) Adjusting bolt***
***(C) Mounting bolt (a)***
***(D) Mounting bolt (b)***

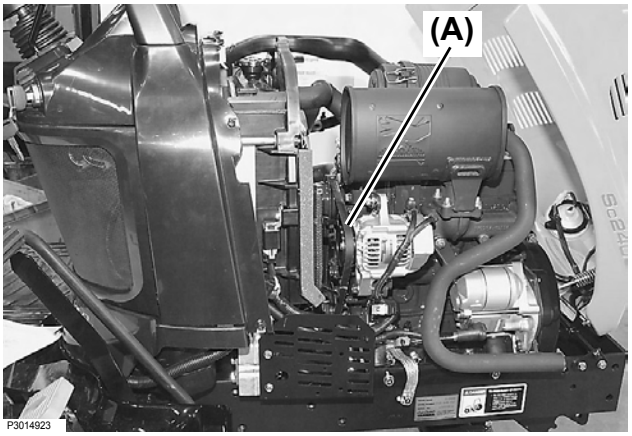


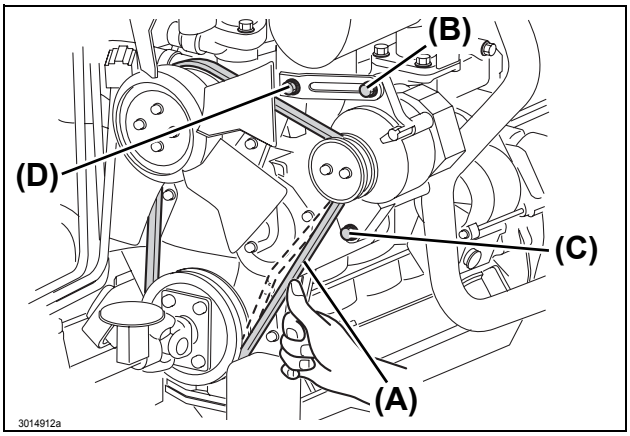


### 2. Adjusting the Belt Tension

1. Loosen the adjusting bolt.
2. Loosen the mounting bolts.
3. Exert an outward pressure to the alternator housing to attain the correct tension.
4. Retighten the mounting bolt (b), mounting bolt (a) and adjusting bolt in that order.
5. Check the belt tension. Adjust as necessary.
6. Close the hood.

### 3. Replacing the Belt

If the belt is excessively worn, damaged or elongated, replace it with a new one. Contact your local Cub Cadet Yanmar for technical assistance.

## ■ Greasing and Lubricating

**IMPORTANT: Prevent damage.**

- Use the recommended Cub Cadet Yanmar greases to avoid failed or prematurely worn parts and components.
- The recommended Cub Cadet Yanmar greases perform efficiently in an average ambient temperature range from –20 to +275 °F (–29 to +135 °C)
- If you want to operate your tractor outside this temperature range, contact your local Cub Cadet Yanmar dealer for applicable special-purpose greases.
  Use Cub Cadet 251H EP Grease or General all purpose grease NLGI grade No.2 or equivalent.

### 1. Lubricating Grease Fittings on the Tractor

**[Extremely wet or muddy conditions]**
Lubricate the grease fittings once every 10 operating hours or once a day.

**[All other conditions]**
Lubricate the grease fittings once every 50 operating hours.

***(A) Forward and reverse drive pedal rod end***

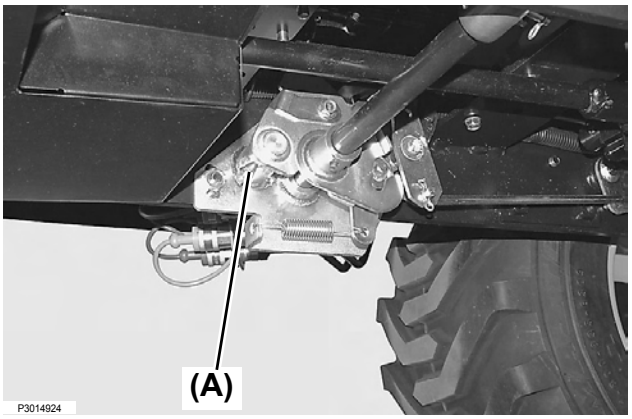


### 2. Lubricating the Implement Control Lever Linkage

***(A) Lubricate the implement control lever linkage***

Lubricate the implement control lever linkage with Cub Cadet GEAR LUBE.

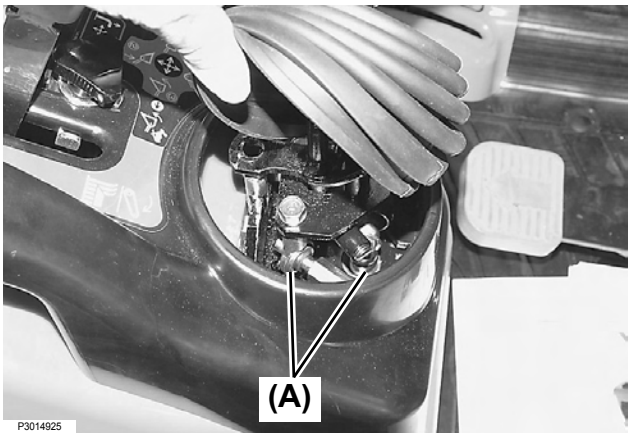

## 3. Lubricating the Seat Slide Rails

1. Pivot the operator's seat forward.
2. Lubricate the seat slide rails with SUPER LUBE lubricant.
3. Lower the operator's seat.

***(A) Seat slide rails***

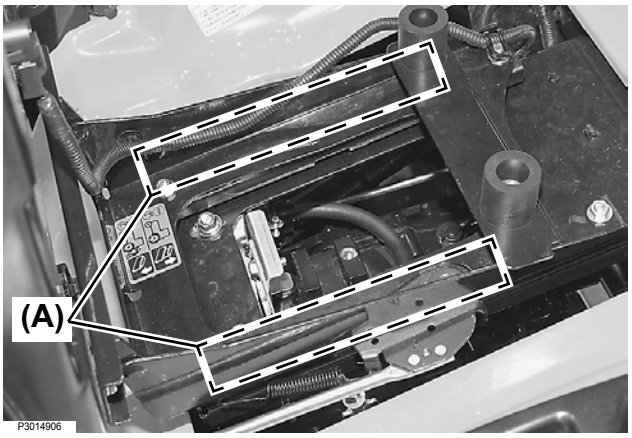


## 4. Lubricating the 3-Point Hitch

Lubricate the ball joints and drawbar with SUPER LUBE lubricant.

***(A) Ball joints***

**NOTE:**

- SUPER LUBE is a registered trademark of Synco Chemical Corp.

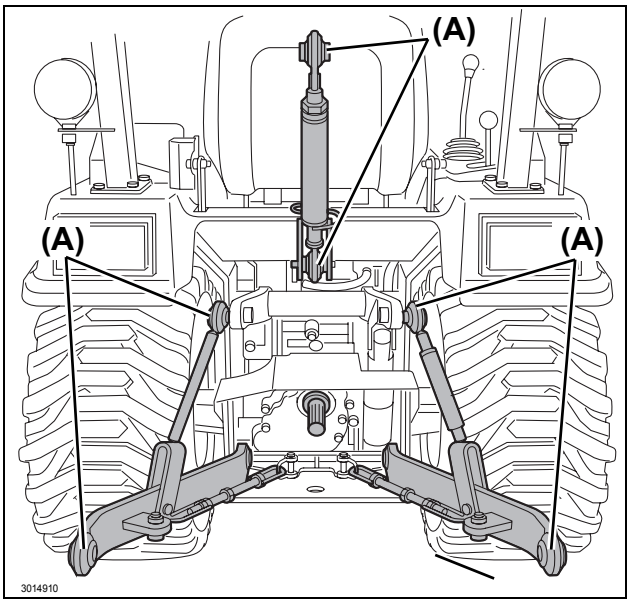

# 5. Every 100 Hours

## ■ Engine Oil

Use an oil of the viscosity appropriate for the air temperature range expected until the next oil change interval.

**Engine crankcase**

| Capacities | Lubricants |
|---|---|
| Approximately 2.5 US qt (2.4 L) | API Service Classifications CF or higher SAE 10W-30 or SAE 10W-40 |

The following oils are recommended:

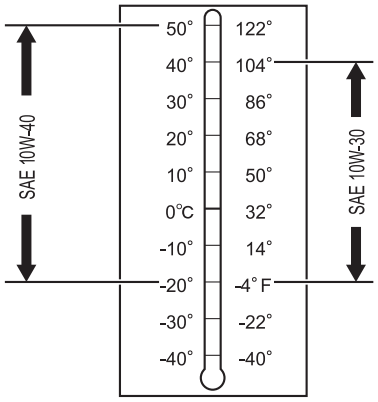


## ■ Changing the Engine Oil

**⚠WARNING**

- **When draining away the engine oil that is still hot, stay clear of the hot engine oil and other components to avoid burn.**

**IMPORTANT: Avoid damage.**

Change the engine oil more frequently if the tractor is used in extremely demanding conditions:

- Extremely dusty conditions
- Frequent slow- or low-speed operation
- Frequent short trips

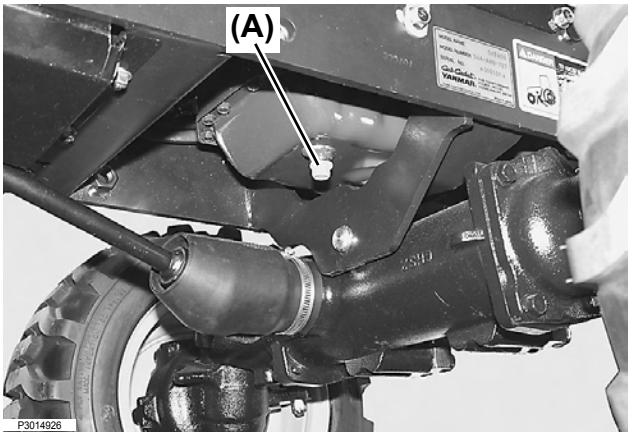


1. Run the engine to warm up the engine oil.
2. Park the tractor safely on a level surface.
3. Open the hood.
4. Place an engine oil pan beneath the engine oil drain plug.

***(A) Drain plug***

5. Remove the drain plug by turning counterclockwise.
6. Reinstall the drain plug. Do not over-tighten it.
7. Remove the oil fill cap.
8. Add approximately 2.5 US qt (2.4 L) of the engine oil.
9. Reinstall the oil fill cap.
10. Start and idle the engine to check for any leaks.
11. If there is any leakage, stop the engine, close the hood and contact your local Cub Cadet Yanmar for technical assistance.
12. Check the engine oil level and add more as necessary.
13. Close the hood.

## ■ Cleaning the Fuel / Water Separator

**⚠WARNING**

**Avoid injury:**

- **Remember that vapor from diesel fuel is explosive and flammable.**
- **NEVER smoke while handling the fuel.**
- **Keep the fuel away from open flames or sparks.**
- **Before servicing, stop the engine.**
- **Before servicing, allow the engine to cool off.**
- **Work in a well-ventilated area.**
- **Immediately wipe away spilled fuel.**

**NOTE:**

- Change the fuel filter if the fuel tank has been run dry.

1. Park the tractor safely and securely.
2. Open the hood.
3. Turn the valve lever to the "Close" position.
4. Turn the sediment bowl locking collar counterclockwise to unlock the sediment bowl, then pull the sediment bowl downward to remove from the separator body.
5. Discard fuel and sediment in the sediment bowl and then clean the sediment bowl with diesel oil.
6. Reinstall the sediment bowl, and turn the valve lever to the "ON" position.
7. Close the hood.
8. Turn the key to START position to crank the engine to bleed the air from the fuel system.

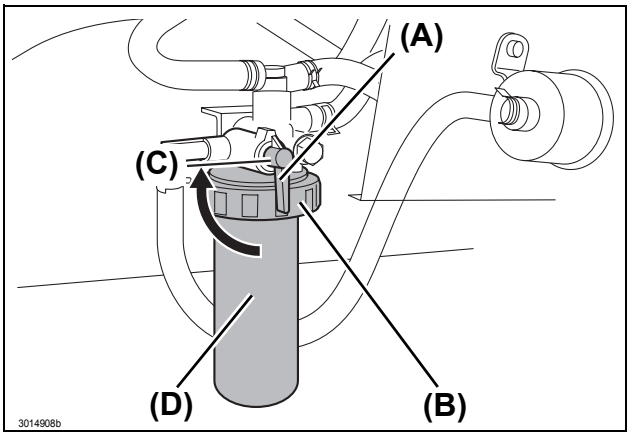


***(A) Valve lever***
***(B) Sediment bowl locking collar***
***(D) Bowl***
*(C) Close*

## ■ Cleaning the Air Cleaner Element

**⚠CAUTION**

**Be careful to avoid injury:**

- **Touching hot surfaces can lead to skin burn. If the engine has been running, the engine and its components will remain hot. Before servicing, allow the engine to cool off.**

**IMPORTANT: Avoid damage.**

A damaged cleaner element may fail to catch dirt and dust, and contaminants can enter the engine:

- NEVER wash the air cleaner element.
- NEVER attempt to clean the air cleaner element by tapping against another object.
- ALWAYS replace the air cleaner element when it is contaminated, damaged or the seal is cracked.

### 1. Servicing the Air Cleaner Element

1. Park the tractor safely and securely.
2. Allow the engine to cool off.
3. Open the hood.
4. Release the two latches that secure the canister cover to the air cleaner canister.

**⚠CAUTION**

- **When removing the air cleaner canister cover or the air cleaner element, be careful not to injure your hand.**

5. While holding down the electric cable, unlock the latch hooks from the air cleaner canister and remove the canister cover.

***(A) Latch hook***
***(B) Air cleaner canister***
***(C) Latches***
***(D) Air cleaner canister cover***
***(E) Primary element***

6. Slightly raise the bottom of the canister.

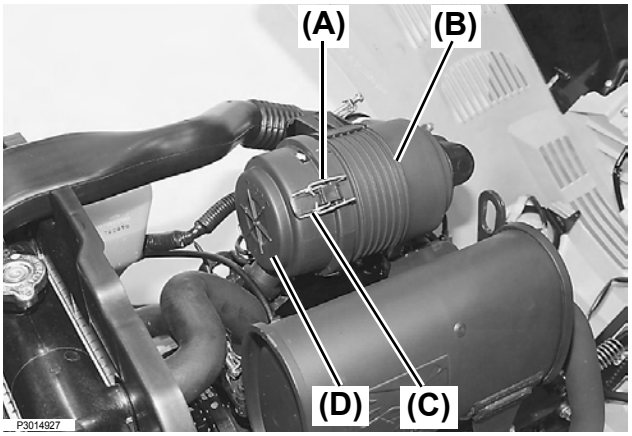


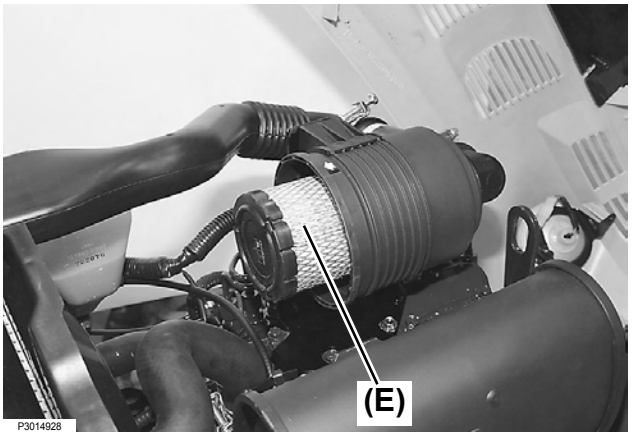

7. Blow air through the element from the inside out using 42 to 71 psi (0.29 to 0.49 MPa, 3.0 to 5.0 kgf/cm$^2$) compressed air to remove the particulates. Use the lowest possible air pressure to remove the dust without damaging the element.
8. Replace the element with a new one if the element is damaged, excessively dirty or oily.
9. Clean inside of the air cleaner canister and canister cover.
10. Reinstall the air cleaner element.
11. Replace the air cleaner canister cover. Make sure that the rubber dust unloading valve points downward.
12. For correct installation, follow the instruction molded onto the canister cover.
13. Hook the two latch hooks onto the air cleaner canister.
14. Push the top of the latches inward toward the canister cover to lock the latches and secure the canister cover.

# 6. Every 200 Hours

## ■ Replacing the Engine Oil Filter

### ⚠WARNING

- ***When draining away the engine oil that is still hot, stay clear of the hot engine oil and other components to avoid burn.***

1. Completely drain the engine oil.
   Refer to “Changing the Engine Oil”.

   ***(A) Drain plug***

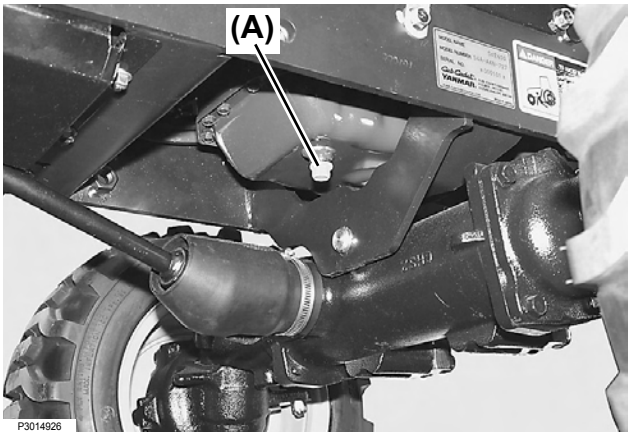


2. Wipe away dirt and dust from around the engine oil filter.

   ***(B) Engine oil filter***

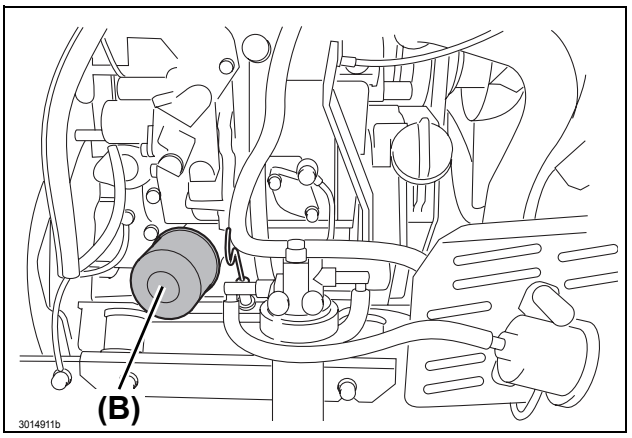


### *NOTICE*

- Prevent dirt and debris from contaminating engine oil. Carefully clean the engine oil filter and the surrounding area before you remove the engine oil filter.

3. Turn the filter counterclockwise to remove it.
4. Apply a small amount of clean engine oil onto the gasket of the new filter.
5. Install a new replacement oil filter by turning it clockwise until the gasket is seated against the filter base. Then turn the filter an additional one half turn.
6. Reinstall the drain plug. Do not over-tighten it.
7. Remove the oil fill cap.
8. Add approximately 2.5 US qt (2.4 L) of the engine oil.
9. Reinstall the oil fill cap.
10. Start and idle the engine to check for any leaks.
11. Stop the engine. Correct any leakage before operating the tractor.
12. Check the engine oil level and add more as necessary.
13. Lower and close the hood.

## ■ Adjusting the Toe-in

Poorly adjusted toe-in can cause difficulty in steering action or abnormal sway of the steering wheel. Measure the dimensions A, A', B and B' on the front wheels, and check that the dimensional difference "A - B" "A' - B'" falls in a range of 0 to 0.3 in. (0 to 7 mm). If this dimension is not met, loosen the locknuts on the right and left tie-rod ends, and adjust the length of threaded portions. When the toe-in falls in the range of 0 to 0.3 in. (0 to 7 mm), secure this adjustment by retightening the locknuts.

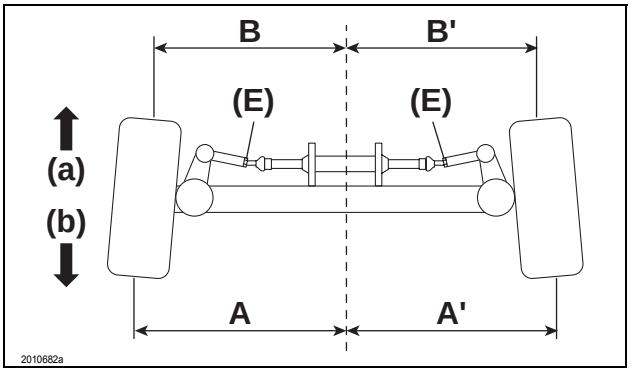


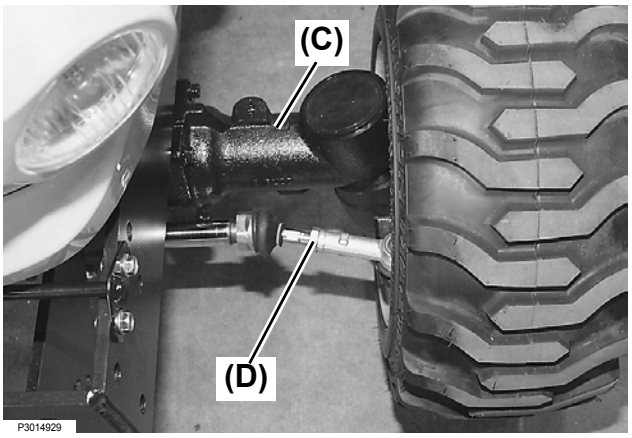


***(C) Front axle***
***(D) Locknut***
***(Tightening torque: 44 to 51 ft•lb (59 to 69 N•m))***
***(E) Tie-rod***
*(a) Front*
*(b) Rear*

# 7. Every 300 Hours

## ■ Transmission Oil

**IMPORTANT: Avoid damage.**

- Make sure to use Cub Cadet Hydraulic / Transmission Fluid for transmission.

**Transmission**

| Capacities | Lubricants |
|---|---|
| Approximately 2.0 US gal (7.5 L) | Cub Cadet Hydraulic / Transmission Fluid |

## ■ Changing the Transmission Oil and Replacing the Transmission Oil Filter

**⚠WARNING**

**Avoid injury:**

- **When draining away the transmission oil that is still hot, stay clear of the hot transmission oil and other components to avoid burn.**

**IMPORTANT: Avoid damage.**

- NEVER remove the cap from the fill port unless absolutely necessary. Contaminated hydraulic oil can cause the transmission to be damaged or fail.
- Whenever changing or replacing the transmission oil and transmission oil filter, always bleed the transmission oil in order to avoid malfunction of transmission.

1. Run the engine for several minutes to warm up the transmission oil.
2. Park the machine safely.

**NOTE:**

- The transmission contains approximately 2.0 US gal. (7.5 L) of oil.

3. Put a drain pan underneath the transmission drain plug. Remove the drain plug, and allow the oil to fully drain away.

***(A) Transmission drain plug***

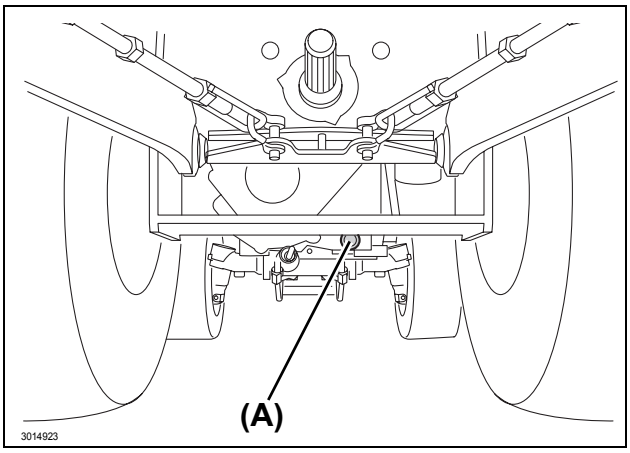


4. Turn the transmission oil filter counterclockwise with the filter wrench to remove.
5. Install a new transmission oil filter and turn clockwise by hand. Tighten the filter with a filter wrench to a torque of 28.9 lb•ft (4 kgf•m).

**NOTE:**

- After hand-tightening, only tighten by 2/3 turn with the filter wrench.

***(A) Transmission oil filter***

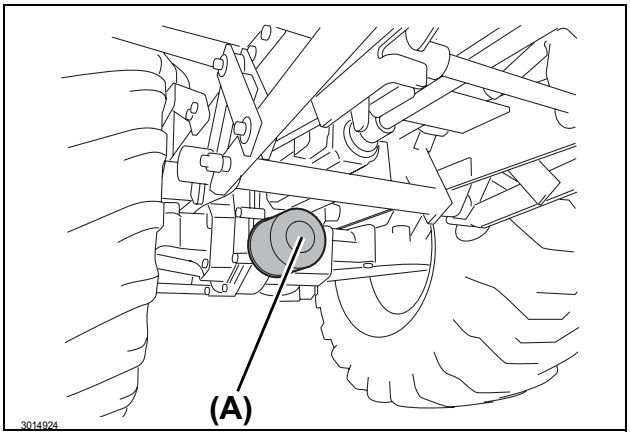


6. Reinstall and tighten the transmission drain plug.
7. Clean the area around the oil fill cap, then remove the oil fill cap from the transmission housing.
8. ADD approximately 2.0 us gal (7.5L) of the transmission oil.
9. Reinstall the oil fill cap.
10. Start the engine and idle it for about 40 seconds.
11. Run the engine at the high-idle speed for about 40 seconds.
12. Then, run the engine at the low-idle speed and slowly step on the forward and reverse drive pedal several times.
13. Again run the engine at the high-idle speed and slowly step on the forward and reverse drive pedal several times.
14. Stop the engine. If any leakage is found, contact your local Cub Cadet Yanmar dealer for technical assistance.
15. After leaving the engine for 5 minutes or more, check the transmission oil level and add more as necessary.

# 8. Every 500 Hours

## ■ Front Axle Case Oil

**IMPORTANT:**

- Make sure to use Cub Cadet GEAR LUBE or SAE 80W-90 gear oil for front axle case oil.

**Front Axle Case Oil**

| Capacities | Lubricants |
|---|---|
| Approximately 2.6 US qt (2.5 L) | Cub Cadet GEAR LUBE or SAE 80W-90 gear oil |

## ■ Changing the Front Axle Case Oil

### ⚠WARNING

**Avoid injury:**

- **When draining away the front axle case oil that is still hot, stay clear of the hot transmission oil and other components to avoid burn.**

1. Operate the tractor to warm up the front axle case oil.
2. Park the tractor safely.

**NOTE:**

- The front axle case contains approximately 2.6 US qt (2.5 L) of oil.
- Be sure to change the oil in both right and left front axles.

3. Place drain pans underneath the axle drain plugs on both sides of the front axle.
4. Remove the axle drain plugs and allow the oil to fully drain.
5. Make sure that the oil has fully drained. Dispose of waste properly. Reinstall and tighten the drain plugs.
6. Remove the dipstick located on the right side of the front axle.
7. Add Cub Cadet GEAR LUBE or SAE 80W-90 gear oil through the fill port to the specified level.
8. Reinstall and tighten the dipstick.
9. Check the front axle case oil level again.

**IMPORTANT: Avoid damage.**

- Before checking the oil level, allow the oil to settle for 1 hour so that the current oil level can be accurately checked on the dipstick. Recheck the oil level after operating the tractor for several hours.

10. Again, check the axle case oil level.

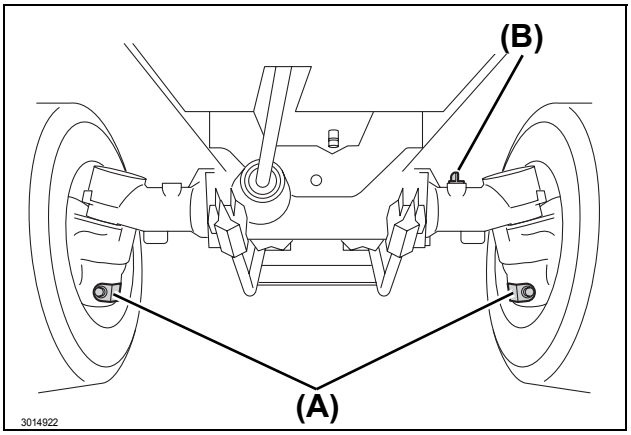


***(A) Axle drain plugs***
***(B) Dipstick***

## ■ Replacing the Fuel Filter Element (in the Fuel / Water Separator)

1. Park the tractor safely and securely.
2. Open the hood.
3. Turn the valve lever to the "Close" position.
4. Turn the locking collar counterclockwise to unlock the sediment bowl, then pull the sediment bowl downward to remove from the separator body.
5. Discard fuel and sediment in the sediment bowl and then clean the sediment bowl with diesel oil.
6. Remove the old fuel filter element from the separator body.
7. Install a new fuel filter element to the separator body.
8. Reinstall the sediment bowl, and turn the valve lever to the "ON" position.
9. Close the hood.
10. Turn the key to the START position to crank the engine to bleed the air from the fuel system.

## ■ Replacing the Fuel Filter

**⚠WARNING**

**Avoid injury:**

- **Remember that vapor from diesel fuel is explosive and flammable.**
- **NEVER smoke while handling the fuel.**
- **Keep the fuel away from open flames or sparks.**
- **Before servicing, stop the engine.**
- **Before servicing, allow the engine to cool off.**
- **Work in a well-ventilated area.**
- **Immediately wipe away spilled fuel.**

1. Open the hood.
2. Remove the two bolts and remove the stay.
3. Remove the filter from the clamp.
4. Place an oil pan underneath the filter.
5. Disconnect the fuel hoses from the fuel filter.
6. Replace the new fuel filter, and plug it with fuel hoses.
7. Discard the old filter. Install the hose to a new filter.
8. Fit the filter in the clamp.
9. Reinstall the stay.

***(A) Stay***
***(B) Bolts***
***(C) Fuel filter***

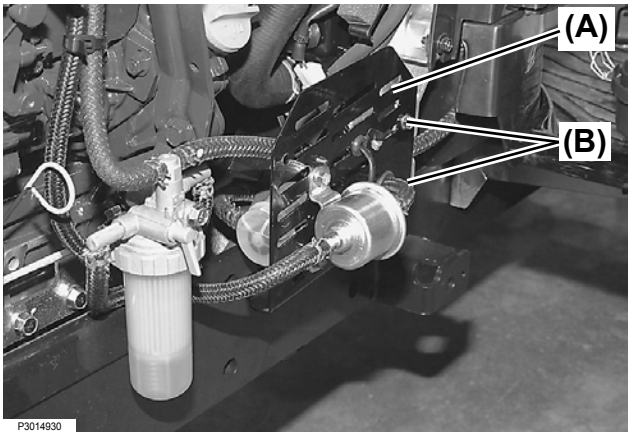

P3014930

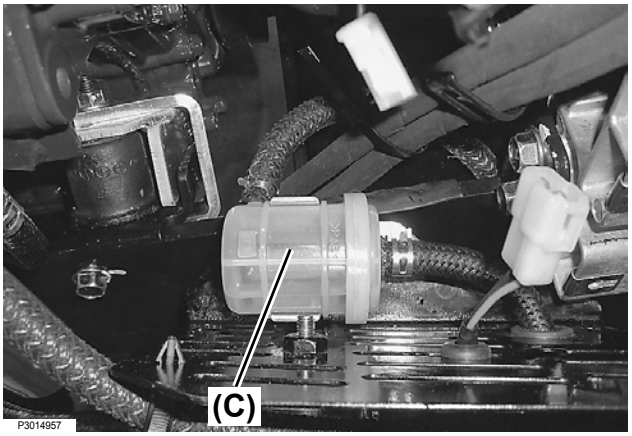

P3014957

# 9. Every 1000 Hours

## ■ Coolant

**⚠WARNING**

**Avoid injury:**

- **Fluids released under pressure from the cooling system can cause severe burns. Pressure build-up in the cooling system can, when the radiator cap is removed, cause the coolant to gush out explosively.**
- **Stop the engine and allow it to cool off.**
- **Do not remove the radiator cap before the radiator and the engine are sufficiently cool such that they can be touched with bare hands. Carefully loosen the cap to the first stop to allow the pressure to be completely released. Only then, remove the cap completely.**

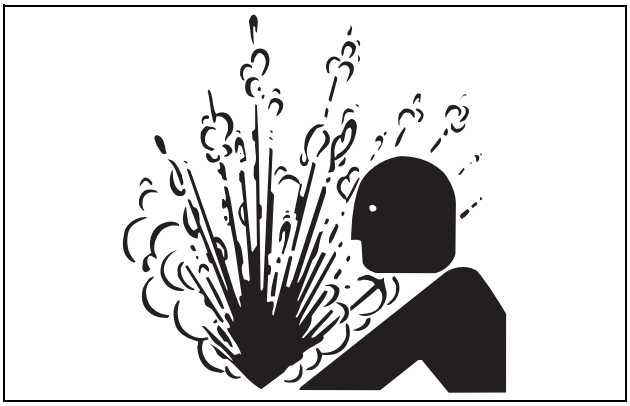

**[The following coolants are recommended]**

- High Quality Permanent Type Antifreeze (Ethylene Glycol with corrosion and rust inhibitor chemicals)

Before using the coolant, study the instructions and data on its container to be sure it is suitable for the engine.
Use a conditioned coolant, or before use, add a conditioner to the coolant.

Prepare the coolant by mixing 50% antifreeze with 50% distilled or deionized water, and then pour this coolant into the radiator. This coolant is intended not only to cool the engine but also to protect the radiator against freezing down to a temperature of –34°F (–37°C).

Follow the instructions on the antifreeze container or contact your local Cub Cadet Yanmar dealer for technical assistance. NEVER exceed the maximum dilution ratio for the coolant. Exceeding the maximum dilution ratio can jeopardize effectiveness of the coolant.

## ■ Flushing the Cooling System

**⚠WARNING**

**Avoid injury.**

- **ALWAYS allow radiator to cool before removing the radiator cap. The radiator will be hot and can cause burns. When the radiator cap is removed, pressure build-up in the cooling system can cause the coolant to spray out explosively.**
- **ALWAYS shut the engine down and allow it to cool.**
- **NEVER remove the radiator cap before the radiator and the engine are sufficiently cool such that they can be touched with bare hands.**
- **Loosen the radiator cap carefully to the first stop, allowing excessive pressure to escape. Only then remove the radiator cap. If the tractor is equipped with a coolant reserve tank, add coolant or water to the reserve tank, not to the radiator. (See "Checking the Cooling System" on page 14-9).**

### 1. Draining the Cooling System

1. Park the tractor safely and securely.
2. Allow the engine to cool off.
3. Open the hood.
4. Carefully open the radiator cap to the first to release all the pressure.

***(A) Radiator cap***

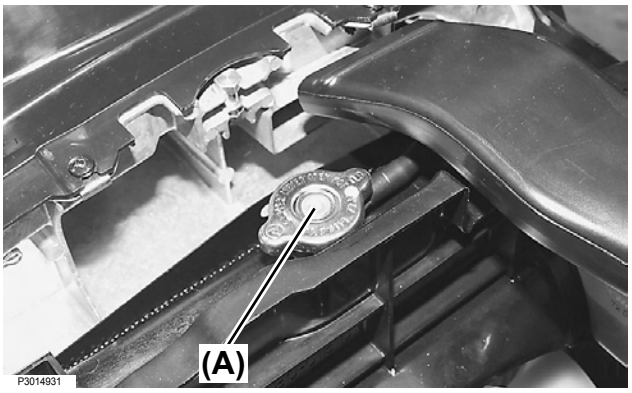


5. Remove the two clamps on the drain hose of the radiator.
6. Place a drain pan underneath the drain hose.
7. Point the drain hose downward and then unplug it.
8. Allow all the coolant to drain.
9. Remove the two bolts and the hose to remove the reserve tank. Drain coolant in the reverse tank.
10. Reinstall the reserve tank.
11. Plug the drain hose and fix it with the clamp.

***(A) Drain hose clamps***
***(B) Drain hose***

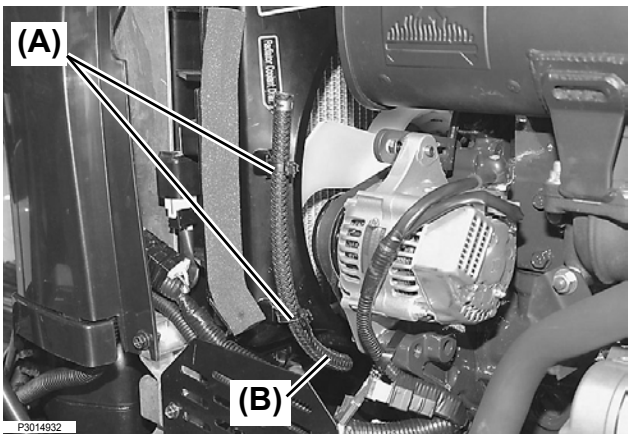

## 2. Flushing the Cooling System

1. Fill the cooling system with water and common flushing / cooling liquid. Follow the flushing / cooling liquid manufacture's instructions.
2. Reinstall and retighten the radiator cap.
3. Start and run the engine until it reaches the operating temperature.

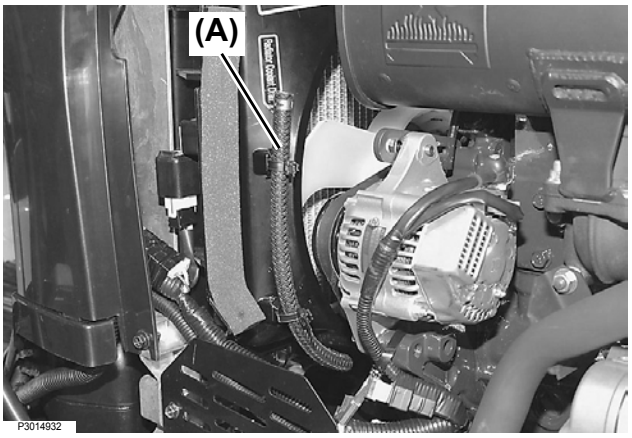


**⚠WARNING**

**Avoid injury:**

- **The engine and coolant can be hot. Avoid contact with skin to prevent severe burns. ALWAYS wear safety glasses when draining the cooling system.**

4. Stop the engine.
5. Immediately drain the cooling system before rust and dirt in it settle. Refer to “Draining the Cooling System”.
6. Plug the drain hose and fix it with the clamp.

***(A) Drain hose***

## ■ Changing the Coolant

**IMPORTANT: Avoid damage.**

- Use of an incorrect coolant mixture can damage the radiator.
- NEVER operate the engine with plain water.
- NEVER use an antifreeze mixture with a concentration of more than 50% water to coolant mixture.
- NEVER pour the coolant or water into the radiator while the engine is hot.

**NOTE:**

- For adding coolant to the cooling system, use of High Quality Permanent Type Antifreeze (Ethylene Glycol with corrosion and rust inhibitor chemicals) is recommended.

For the correct mixture ratio, see the manufacturer's directions on the coolant container.

1. Allow the radiator to cool down.
2. Fill the cooling system. The cooling system capacity is approximately 3.4 US qt (3.2 L).
3. Reinstall and retighten the radiator cap.
4. Start and run the engine until it reaches the operating temperature.
5. Stop the engine.
6. Check the reserve tank coolant level, and add the coolant as necessary.
7. Lower the hood.

## ■ Adjusting the Engine Valve Clearance

Contact your local Cub Cadet Yanmar dealer.

## ■ Checking the Fuel Injection Nozzle Injection Pressure

Contact your local Cub Cadet Yanmar dealer.

## ■ Checking the Fuel Injection Pump

Contact your local Cub Cadet Yanmar dealer.

## 10. Every 1 Year

### ■ Replacing the Air Cleaner Element

For the maintenance work, see “Replacing the Air Cleaner Element” on page 14-36.

### ■ Flushing the Cooling System

For the maintenance work, see “Flushing the Cooling System” on page 14-36.

### ■ Changing the Coolant

For the maintenance work, see “Changing the Coolant” on page 14-35.

## 11. Every 2 Years

### ■ Replacing the Radiator Hoses and Clamp

For the maintenance work, see “Checking the Radiator Hoses and Clamps” on page 14-7.

### ■ Replacing the Fuel Line

For the maintenance work, see “Checking the Fuel Line” on page 14-10.

### ■ Replacing the Intake Air Hose

For the maintenance work, see “Checking the Intake Air Hoses and Clamps” on page 14-10.

### ■ Replacing the Hydraulic Hoses

For the maintenance work, see “Checking the Hydraulic Hoses” on page 14-16.

# 15. SERVICING THE ELECTRICAL SYSTEM

**⚠WARNING**

- To avoid personal injury, do as follows:
- Read the “Safe Precautions” at the head of this manual.
- Read the danger, warning and caution statements on the safety-alert symbols on the tractor.
- To avoid possible poisoning from exhaust fume, do not operate the engine in an enclosed place that lacks adequate ventilation.
- NEVER start the engine while standing on the ground. Be sure to start the engine only from the operator's seat.
- Before starting any servicing work, park your tractor on solid, level ground, engage the parking brake securely, turn off the Power Take Off (PTO) switch, lower the implement to the ground, set the forward and reverse drive pedal to the neutral position, stop the engine and from the starter key switch.

## 1. Battery

### ■ Special Note for the Battery

**⚠WARNING**

- **The battery posts, terminals and associated accessories contain lead and lead compounds which are known to the State of California to cause cancer and reproductive harm. After handling the battery, wash your hands thoroughly.**

## ■ Servicing the Battery Safely

### ⚠WARNING

**Avoid personal injury. The battery electrolyte contains sulfuric acid, which is poisonous and can cause serious burn:**

- **Wear protective goggles and gloves.**
- **NEVER expose skin.**
- **If electrolyte is accidentally swallowed, immediately seek medical attention.**
- **If the electrolyte has entered eyes, immediately flush with running water for 15-30 minutes and seek medical attention.**
- **If the battery electrolyte comes into contact with skin, immediately flush with a plenty of water and, if necessary, seek medical attention.**

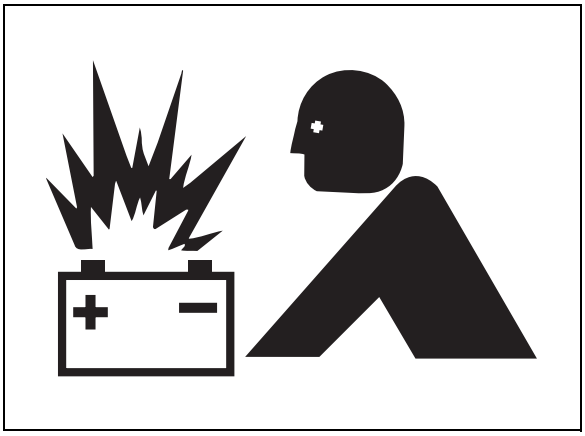

**Batteries may emit flammable/explosive gasses. Use extreme caution when handling batteries.**

- **NEVER smoke near the battery.**
- **Wear protective goggles and gloves.**
- **NEVER allow any metal piece to contact across the battery posts.**
- **When disconnecting the battery cables, first remove the negative cable.**
- **When reconnecting the battery cables, connect the negative cable last.**

### *NOTICE*

- Always remain aware of your environmental responsibility.
- For environmentally appropriate disposal of possibly hazardous materials on your tractor, such as its engine oil, diesel fuel and hydraulic fluid, follow the disposal guidelines of the EPA or other relevant governmental bodies. Consult the local authorities or waste disposal facility.
- NEVER dispose of the hazardous wastes from your tractor inappropriately; for example by dumping them into a sewer, on/into the ground or into the groundwater or any waterways.
- Failure to follow these instructions may seriously impact the environment.

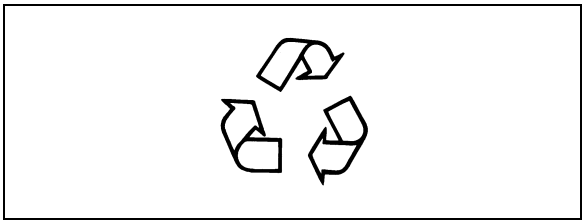

## ■ Inspecting the Battery

The battery used on your tractor is a maintenance-free design, and you must not add electrolyte or recharge it. When the engine is off, measure the voltage on the battery across the positive and negative posts. If the reading is 11 V or lower, replace the battery with a new one.

## ■ Removing and Installing the Battery

***(A) Black / yellow negative (–) cable***
***(B) Negative terminal***
***(C) Red positive terminal cover***
***(D) Black positive (+) cable***
***(E) Threaded rods***
***(F) Bracket***

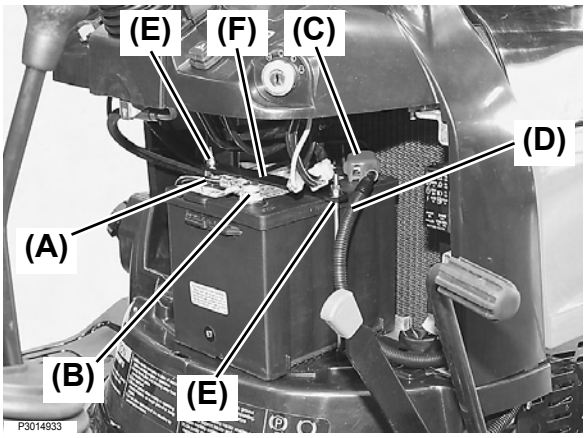


### 1. Removing the Battery

1. Park the tractor safely and securely.
2. Open the rear grille screen.
3. Disconnect the black / yellow negative (–) cable from the battery.
4. Remove the nuts from threaded rods.
5. Remove the threaded rods and bracket.
6. Pull out the battery backward around 4 in. (100 mm).
7. Pull back the red positive terminal cover and disconnect the black positive (+) cable.
8. Remove the battery.

## 2. Installing the Battery

1. Install the battery onto the tractor.
2. Connect the black positive (+) cable to the battery and then put the red positive terminal cover on the terminal.
3. Install the threaded rods and bracket and, retighten the nuts. Avoid over-tightening.
4. Connect the black / yellow negative (–) cable.
5. Apply petroleum jelly to the battery terminals to protect them against corrosion.
6. Close the rear grille screen.

## ■ Cleaning the Battery and Terminals

1. Disconnect the battery cables, black / yellow negative (–) cable first, and remove the battery.
2. Dissolve four tablespoons of baking soda in 1 gallon of water to prepare a solution. Use this solution to wash the battery. Be very careful not to allow the solution to enter the battery cells.
3. Rinse the battery with water and allow it to dry.
4. Clean the terminals and battery cable ends with wire brush to remove corrosion.
5. Apply petroleum jelly or silicone spray to the battery terminals to protect them against corrosion.
6. Install the battery.
7. Connect the black positive (+) cable first, then connect the black / yellow negative (–) cable.

## ■ Using a Booster Battery

### ⚠WARNING

**Avoid personal injury:**

- **NEVER attempt to jump-start a frozen battery. Warm it to 60°F (16°C).**
- **NEVER connect the negative (–) booster cable to the negative (–) terminal of the discharged battery. Connect to an appropriate grounding point other than the discharged battery.**

***(A) Booster battery***
***(B) Battery on a disabled vehicle***
***(C) Positive (+) post of booster battery***
***(D) Positive (+) post of battery on a disabled vehicle***
***(E) Negative (–) post of booster battery***
***(F) Other end of booster cable***

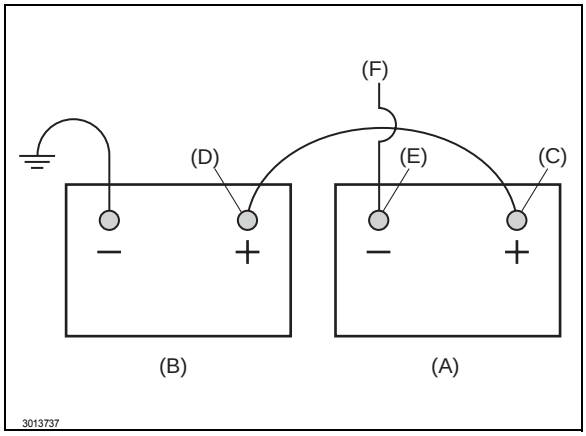


1. Connect the positive (+) booster cable to the positive (+) post on the booster battery.
2. Connect the other end of positive (+) booster cable to the positive (+) post of the battery on the disabled vehicle.
3. Connect the negative (–) booster cable to the negative (–) post on the booster battery.
4. Connect the other end of negative (–) booster cable to the metal frame of the disabled vehicle.
5. Start the engine of the disabled vehicle, and run the engine for several minutes.
6. Carefully disconnect the booster cables by performing the booster cables connection procedure in the reverse order (disconnect the negative cable first, and then the positive cable).

## 2. Fuses

**IMPORTANT: Avoid damage.**

- Use of a fuse other than a correctly rated one may cause damage to the electrical system. Replace the blown fuse with a new fuse of the same amperage rating.

### ■ Replacing the Accessory Fuses

1. Park the tractor safely and securely.
2. Open the rear grille screen.
3. Grip both ends of the fuse holder cover and remove.
4. Locate the fuses by referring to the diagram at the right.
5. Remove the blown fuse from its socket.
6. Push the new fuse into the socket.
7. Reinstall the fuse holder cover.
8. Close the rear grille screen.

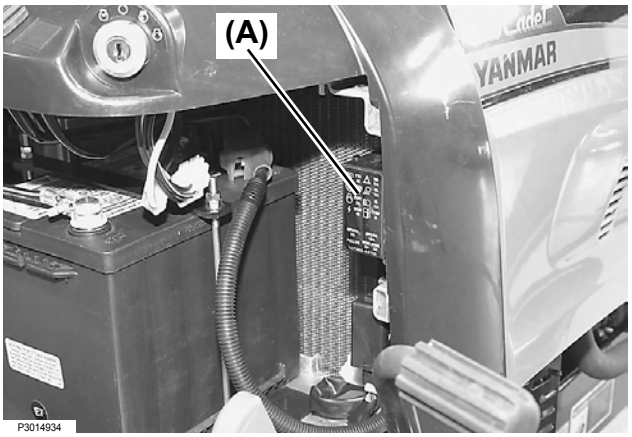


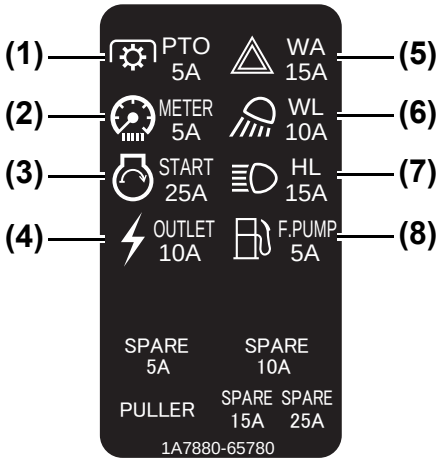


***(A) Fuse holder cover***
*(1) PTO fuse: 5A*
*(2) Meter panel fuse: 5A*
*(3) Start relay fuse: 25A*
*(4) DC outlet fuse: 10A*
*(5) Warning light fuse: 15A*
*(6) Work light fuse: 10A*
*(7) Head light fuse: 15A*
*(8) Fuel pump fuse: 5A*

### ■ Checking the Alternator Fuse and the Main Fuse

1. Park the tractor safely and securely.
2. Open the hood.
3. Locate the fuses by referring to the picture at the right.
4. Check the fuses.

**IMPORTANT: Avoid damage.**

- The alternator fuse and the main fuse are of slow blow type. When any of these fuses has been blown, contact your local Cub Cadet Yanmar dealer.

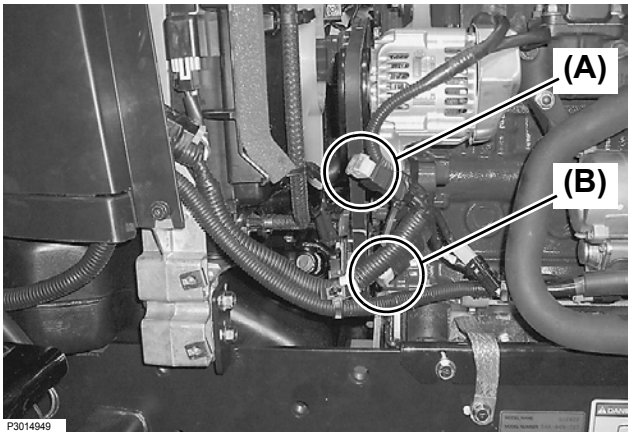


***(A) Alternator fuse: 60A***
***(B) Main fuse: 60A***

# 3. Bulb

## ■ Replacing the Headlight Bulb

**IMPORTANT: Avoid damage.**

- NEVER touch the headlight bulbs with bare fingers, otherwise, the bulb may fail prematurely. When inspecting or replacing the bulb, use gloves or a piece of cloth to handle the bulb.

1. Park the tractor safely and securely.
2. Stop the engine and remove the key from the starter key switch.
3. Open the hood.
4. Remove the headlight cover.
5. Turn the headlight bulb socket counterclockwise slightly to remove it from the headlight bulb housing.

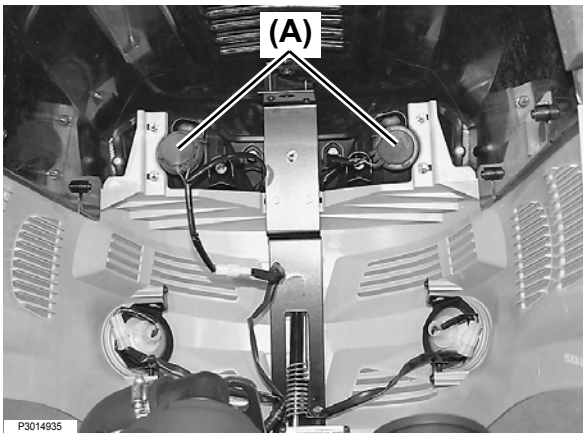


**⚠WARNING**

**Avoid injury:**

- **The halogen light bulb contains compressed gas. If the glass has been scratched or is dropped, the bulb may shatter. Wear protective goggles and handle the bulb carefully when replacing it.**

6. Remove the old headlight bulb from the bulb socket.
7. Install new one into the bulb socket and fix it.
8. Turn the headlight bulb socket clockwise slightly and fix it to the bulb housing.
9. Put on the headlight cover on the headlight bulb housing and fix it.
10. Close the hood.
11. Check that the headlights light normally.

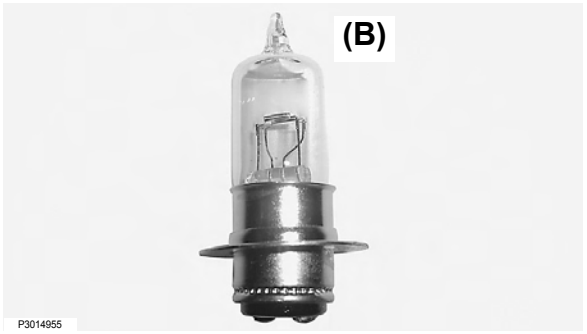


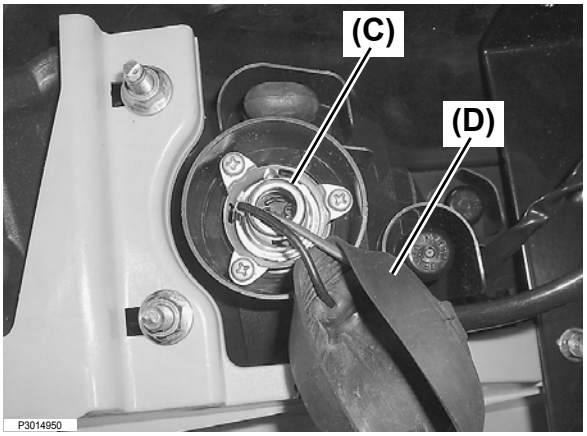


***(A) Headlight assembly***
***(B) Headlight bulb***
***(C) Headlight socket***
***(D) Headlight cover***

## ■ Replacing the Work Light Bulb

1. Park the tractor safely and securely.
2. Stop the engine and remove the key from the starter key switch.
3. Open the hood.
4. Turn the work light socket counterclockwise slightly to remove it from the work light housing
5. Remove the bulb from the work light socket.
6. Install a new bulb into the work light socket.
7. Turn the work light socket clockwise slightly and fix it to the work light housing.
8. Close the hood.
9. Check that the work lights light normally.

***(A) Work light assembly***
***(B) Work light bulb***
***(C) Work light socket***

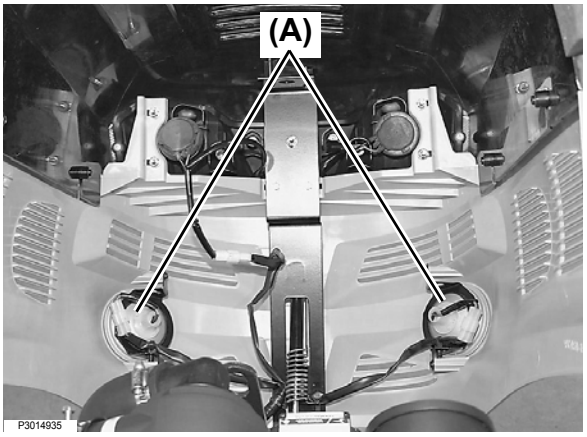





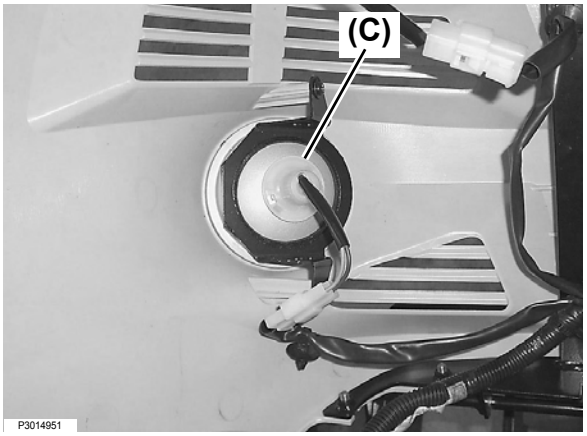

## ■ Replacing the Tail Light Bulb

1. Park the tractor safely.
2. Stop the engine and remove the starter key switch.
3. Remove the two screws and lens from the assembly.
4. Push down and rotate the bulb to remove it.
5. Push the new bulb into the socket and rotate to lock it into position.
6. Check that the tail light lights normally.
7. Reinstall the lens.

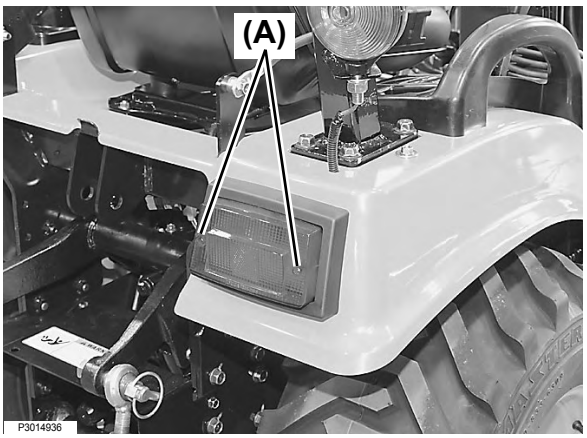


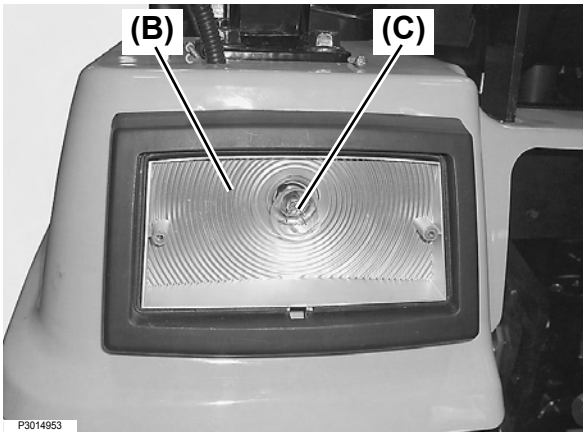


***(A) Screw***
***(B) Lens***
***(C) Bulb***

## ■ Replacing the Turn Signal / Hazard Lights Bulb

**NOTE:**

- The turn signal / hazard lights can be serviced after removing the front or rear lens assembly.

1. Park the tractor safely.
2. Stop the engine and remove the starter key switch.
3. Remove the lens from the light assembly.
4. Push down and rotate the bulb to remove it.
5. Push the new bulb into the socket and rotate to lock it into position.
6. Check that the turn signal / hazard lights operate normally.
7. Install the lens.

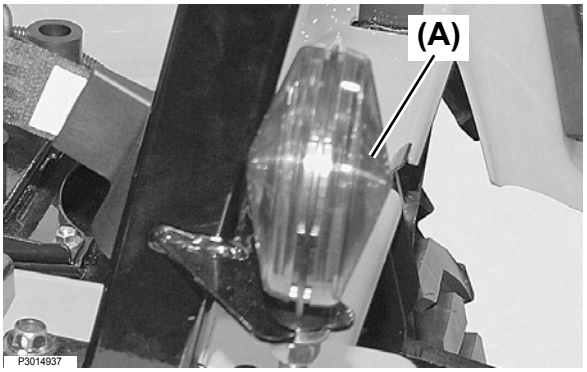


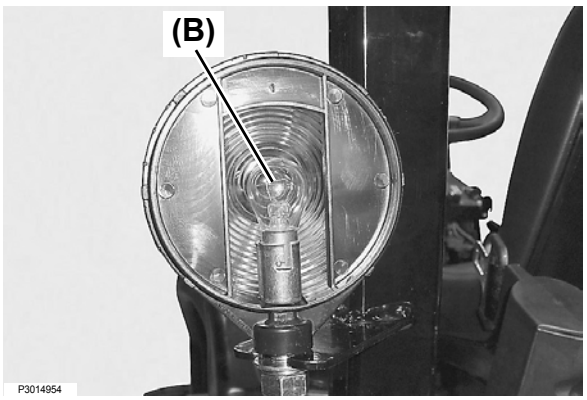


***(A) Lens***
***(B) Bulb***

### ■ Replacing the Instrument Panel Light Bulb

If any instrument panel bulb is blown, contact your local Cub Cadet Yanmar dealer for technical assistance.

## 4. Headlights

### ■ Adjusting the Headlights

The headlights are fixed. If their adjustment is required, contact your local Cub Cadet Yanmar dealer for technical assistance.

# 16. STORAGE

## 1. Safe Practices for Storage

**⚠WARNING**

**Be careful to avoid injury:**

- **Remember that vapor from diesel fuel is explosive and flammable.**
- **The exhaust from the engine contains carbon monoxide that can lead to carbon monoxide poisoning, possibly causing serious illness or even death. To avoid the danger of poisoning from the exhaust gas, NEVER run the engine in a closed building that is not positively ventilated.**
- **NEVER wash the tractor while the engine is running.**
- **Run the engine as shortly as possible when moving the tractor into and from the place of storage.**
- **When fuel is in the fuel tank, NEVER store the tractor in a building where fuel vapor can come into contact with open flame or spark.**
- **Before storing the tractor indoors, allow the engine to cool off.**

### 1. Preparing the Machine for Storage

If planning to store the tractor for a long period, follow the procedure described below.
The procedure is intended to ensure that the tractor is readily prepared for operation when it is removed from storage.

1. Repair any worn or damaged parts. Replace the parts as necessary. Tighten any loose bolts and nuts.
2. Repair scratched or chipped metal surfaces to prevent rusting.
3. Remove grass clippings and debris from the tractor.
4. Clean below the deck and remove grass clippings and debris from inside the chute and bagger.
5. Remove the ballast from the tractor.
6. Wash the tractor and apply wax to the metal and plastic surfaces.
7. Run the tractor for 5 minutes to dry the belts and pulleys.
8. Apply a light coat of clean engine oil to pivots and wear points to prevent rusting.
9. Lubricate the grease fittings.
10. Check the tire pressure. Adjust the tire pressure slightly higher than specified.
11. Change the engine oil and run the engine for about 5 minutes to circulate the oil throughout the entire engine block and the internal moving parts.
12. Lower any implement to the ground. Apply grease to the exposed areas on the hydraulic cylinder piston rods.

## 2. Preparing the Fuel and Engine for Storage

### ■ Fuel

If using stabilized fuel, fully fill the fuel tank with stabilized fuel.

**NOTE:**

●By filling the fuel tank, the amount of air remaining in the tank decreases, and this can help prevent deterioration of the fuel in the tank.

If stabilized fuel has not been used.

1. Park the tractor safely and securely in a well-ventilated place.

**NOTE:**

●Assuming that this is the last time the tractor is operated for the season, use all the fuel in the fuel tank.

2. Run the engine until all the fuel in the tank is used.
3. Turn the key to the OFF position.

**IMPORTANT: Be very careful to avoid damage.**

●In degraded fuel, varnish can occur and clog the fuel injector components and adversely affect engine performance.
●Mix stabilizer into fresh fuel before filling the fuel tank.

4. Mix fresh fuel and fuel stabilizer in a separate container. Observe the stabilizer manufacturer's instructions for mixing.
5. Fill the fuel tank with the stabilized fuel.
6. Run the engine for several minutes to allow the fuel-stabilizer mixture to be circulated through the fuel system.

### ■ Engine

If the tractor is scheduled to be stored for longer than 60 days, prepare the engine for storage.

1. Change the engine oil and filter while the engine is still warm.
2. Service the air filter if necessary.
3. Remove dust and debris from the engine air intake screen.
4. Clean the engine and engine compartment.

**IMPORTANT: Avoid damage.**

●ALWAYS disengage the clutch before storing the tractor. If the clutch is engaged for a long period, the clutch plate may develop rust, causing the clutch not to disengage when the tractor is operated next time.

5. Remove the battery.
6. Clean the battery and battery posts. Check the electrolyte level.
7. Close the fuel shut-off valve.
8. Store the battery in a cool, dry, dark place. However, the temperature of that place must not become low enough to freeze the electrolyte in battery.
9. Store the tractor in a dry, safe place. If the tractor is stored outdoors, protect it with a waterproof cover. Jack up the tractor and place blocks under the front and rear axles to allow the tires to be lifted off the ground. Do not allow the tires to be exposed to direct sunlight or extremely high temperature.

## 2. Preparing the Stored Tractor for Operation

1. Check the tire pressure. If necessary, refill with compressed air.
2. Check the levels of engine oil, transmission/hydraulic oil and engine coolant.
3. Check the battery electrolyte level.
4. Check that the battery is adequately charged.
5. Install the battery.
6. Check the fan belt tension.
7. Lubricate all the grease fittings.
8. If the tractor has a fuel shut-off valve, open it.
9. Run the engine for 5 minutes while the mower or any implement is disengaged to allow the oil to be fully distributed throughout the entire engine. After stopping the engine, walk around the tractor and check for any evidence of oil or other leakage.
10. Make sure that all the shields, guards or deflectors are in place.

# 17. TROUBLESHOOTING

## 1. How to Use the Troubleshooting Table

**The troubleshooting table given below is intended to provide a simple guide. If any fault, failure or a problem that requires repair work has occurred, contact your local Cub Cadet Yanmar dealer for technical assistance.**

### 1. Engine

| | Symptom | Cause | Remedy |
|---|---|---|---|
| 1 | **Engine does not start or engine starts, but stalls immediately.** | ● Diesel fuel is not flowing to the engine. | • Check that fuel is in the fuel tank. Refuel as necessary. |
| | | | • Check if the fuel filter is clogged. Replace the clogged filter. |
| | | ● Air is trapped in the fuel. | • Check the fuel line for looseness. Retighten any loose connection. |
| | | ● Water is trapped in the fuel. | • Remove water from the fuel. Refill the diesel fuel. |
| | | ● In cold weather, the engine oil viscosity is excessively high, and this causes greater resistance. As a result, the engine speed does not increase. | • Use a less viscous engine oil. (Be sure to change to a more viscous engine oil in summer.) (Consult your local Cub Cadet Yanmar dealer.) |
| | | ● The power of the battery is too low and the starter fails to accelerate to a speed sufficient for starting the engine. | • Clean the battery posts and terminals, then measure the voltage on the battery. If the voltage is 11 V or lower, replace the battery with a new one. |
| 2 | **Though the engine has started, it fails to run smoothly or it is not powerful.** | ● Stale diesel fuel (owing to prolonged storage) | • Replace the diesel fuel. |
| | | ● Contaminated diesel fuel | • Replace the diesel fuel. |
| | | ● Clogged air cleaner | • Replace the air cleaner. |
| | | ● The fuel shut-off valve is not in the fully OPEN position. | • Fully open the fuel shut-off valve. |
| 3 | **The engine has successfully started but suddenly stopped.** | ● No diesel fuel | • Refuel. |
| | | ● The fuel shut-off valve is not in the OPEN position. | • Open the fuel shut-off valve. |
| 4 | **Blackish exhaust** | ● Poor quality of diesel fuel | • Replace the diesel fuel and fuel filter. |
| | | ● Too much engine oil | • Drain the engine oil to the specified level. |
| | | ● Clogged air filter | • Clean or replace the air filter. |
| 5 | **Pale bluish exhaust** | ● Failed injection nozzle | • Contact your local Cub Cadet Yanmar dealer for technical assistance. |
| | | ● Poor quality of diesel fuel | • Replace the diesel fuel and fuel filter. |

| | | | |
|---|---|---|---|
| 6 | **The engine overheats.** | ● Insufficient engine coolant | • Add engine coolant. |
| | | | • Check the radiator and the lines to and from the radiator for leakage. If leakage is found, contact your local Cub Cadet Yanmar dealer for technical assistance. |
| | | ● The engine is overloaded. | • Operate the tractor carefully. Avoid overloading. |
| | | ● Insufficiently tensioned fan belt | • Adjust the fan belt to the specified tension value; or replace it. |
| | | ● The radiator core is blocked. | • Eliminate the cause of blocking. |
| | | ● Poor quality of engine coolant | • Possibly, sludge has accumulated on the engine water jacket. Contact your local Cub Cadet Yanmar dealer for technical assistance. |

## 2. Machine

| | Symptom | Cause | Remedy |
|---|---|---|---|
| 1 | **The machine excessively vibrates.** | ● Engine speed is too low. | • Run the engine at a higher appropriate speed. |
| | | ● The Power Take Off (PTO) connecting the machine with the mounted implement is not securely connected. | • Disconnect the Power Take Off (PTO) shaft, and reconnect it. Check if excessive vibration reoccurs. If excessive vibration persists, immediately stop operation and contact your local Cub Cadet Yanmar dealer for technical assistance. |
| | | ● The engine throttle has not been correctly adjusted. | • Contact your local Cub Cadet Yanmar dealer for technical assistance. |
| 2 | **Engine has successfully started, but the machine fails to operate.** | ● Parking brake is in the engaged state. | • Disengage the parking brake. |
| | | ● Insufficient transmission oil, deteriorated transmission oil or clogged transmission filter | • Check the amount and quality of the oil. Replace deteriorated oil; refill as necessary. Check the filter for clogging, and replace the clogged filter with a new one. |
| | | ● Transmission oil is too cold. | • Start the engine, and warm up. Only then, operate the tractor. |
| 3 | **3-point hitch does not rise at all.** | ● Insufficient transmission oil, deteriorated transmission oil or clogged transmission filter | • Check the amount and quality of the oil. Replace deteriorated oil; refill as necessary. Check the filter for clogging, and replace the clogged filter with a new one. |
| | | ● Transmission oil is too cold. | • Start the engine, and warm up. |
| | | ● Excessively heavy implement on the 3-point hitch | • Use an implement of an acceptable weight. |
| 4 | **3-point hitch lowers too slowly.** | ● Hydraulic pressure stop valve is in an insufficiently open position. | • Open the hydraulic pressure stop valve. |
| 5 | **3-point hitch does not lower at all.** | ● Hydraulic pressure stop valve is in the closed position. | • Open the hydraulic pressure stop valve to an appropriate position. |
| 6 | **3-point hitch lowers too fast.** | ● Hydraulic pressure stop valve is in an excessively open position. | • Close the hydraulic pressure stop valve to an appropriate position. |

## 3. Brake

| | Symptom | Cause | Remedy |
|---|---|---|---|
| 1 | **Brake does not function correctly.** | ● Misadjusted brake | • Adjust the play the brake pedal. |
| | | ● Worn or damaged brake linkage | • Contact your local Cub Cadet Yanmar dealer for technical assistance. |
| | | ● Excessively worn brake disk | • Contact your local Cub Cadet Yanmar dealer for technical assistance. |
| | | ● Deteriorated transmission oil | • Replace the transmission oil. |
| | | ● Degraded quality of transmission oil | • Replace the transmission oil. |

## 4. Steering

| | Symptom | Cause | Remedy |
|---|---|---|---|
| 1 | **Steering does not function correctly.** | ● Uneven tire pressure | • Adjust the tire pressure to the correct level. |
| | | ● Insufficient transmission oil, deteriorated transmission oil or clogged transmission filter | • Check the amount and quality of the oil. Replace deteriorated oil; refill as necessary. Check the filter for clogging, and replace the clogged filter with a good one. |
| | | ● Transmission oil is too cold. | • Start the engine, and warm up. |
| | | ● Under lubricated steering linkage | • Lubricate steering linkage. |
| | | ● Play is too great. | • Contact your local Cub Cadet Yanmar dealer for technical assistance. |
| | | ● Bent axle | • Contact your local Cub Cadet Yanmar dealer for technical assistance. |

# 18. INDEX


- 3-Point Hitch Control / Cutting Height Adjustment Lever ..... 5-2, 10-1
- 4-Wheel Drive Lever ..... 8-4
- Air Cleaner Element ..... 14-25
- Alternator ..... 14-20
- Alternator / Battery Charging Light ..... 5-3
- Battery ..... 15-1
- Brake Pedal ..... 5-2
- Coolant ..... 14-32
- Cruise Control Lever ..... 5-2
- Cruise Control ..... 8-7
- Differential Lock ..... 8-10
- Drawbar ..... 4-1
- Drive Pedal (Forward / Reverse) ..... 5-2
- Engine Oil Dipstick ..... 14-5
- Engine Oil Fill Cap ..... 14-5
- Engine Oil Filter ..... 14-23
- Engine Oil Pressure Warning Light ..... 5-3
- Fan Belt ..... 14-20
- Fuel ..... 13-2, 14-3
- Fuel Cap ..... 14-4
- Fuel Shut-Off Valve ..... 14-24
- Fuel Filter ..... 14-31
- Fuel Gauge ..... 5-3
- Fuel / Water Separator ..... 14-19
- Glow ..... 7-6
- Hazard Light ..... 8-3
- Hazard Lights Button Switch ..... 5-4
- Headlight ..... 15-10
- Headlight Switch ..... 5-4
- Hood ..... 5-1, 14-2
- Hour Meter ..... 5-3
- Hydraulic Flow Control / Stop Knob ..... 5-2, 11-2
- Hydro Static Transmission (HST) Pressure Release Lever ..... 5-2, 8-13
- Hydraulic Quick Couplers ..... 5-1
- Implement Control Lever ..... 5-2, 11-3
- Inflation Pressure ..... 12-2
- Instrument Panel ..... 5-3
- Lift Link ..... 10-2
- Lubricant ..... 13-2
- Maximum Weight ..... 12-4
- Mid- / Rear-Power Take Off (PTO) Select Lever ..... 5-2, 9-3
- Parking Brake ..... 7-3
- Parking Brake Lever ..... 5-2
- Power Steering ..... 8-17
- Power Take Off (PTO) ..... 9-1
- Power Take Off (PTO) switch ..... 5-2, 7-4
- Range Shift Lever ..... 8-4
- Retractable Seat Belt ..... 7-2
- Reverse-Override-Switch ..... 5-2, 9-2
- Roll-Over Protective Structure (ROPS) ..... 1-8
- Seat Adjustment Lever ..... 7-2
- Seat Safety Switch ..... 14-12
- Slow Moving Vehicle (SMV) Emblem ..... 5-1, 8-11
- Starter Key Switch ..... 7-6
- Sway Link ..... 10-2
- Tachometer ..... 5-3
- Tail Light ..... 5-1
- Throttle Control Lever ..... 5-2
- Top Link ..... 10-1
- Top Link Retainer ..... 10-1
- Transmission Oil ..... 14-28
- Turn Signal Switch ..... 8-3
- Wheel Bolt Tightening Torque ..... 12-2




## *Sc Series Sub-Compact Tractor*

# *Sc2400*

**Cub Cadet Yanmar LLC.**
**P.O. Box 361052**
**Cleveland, OH 44136-1052**